Lakewood Carwash

Los Angeles-South Coast, Summary Report

1.0 Project Characteristics

1.1 Land Usage

Land Uses	Size	Metric	Lot Acreage	Floor Surface Area	Population
Other Asphalt Surfaces	0.95	Acre	0.95	41,382.00	0
Automobile Care Center	3.90	1000sqft	0.09	3,900.00	0
User Defined Retail	3.10	User Defined Unit	0.07	3,105.00	0

1.2 Other Project Characteristics

Urbanization	Urban	**Wind Speed (m/s)**	2.2	**Precipitation Freq (Days)**	33
Climate Zone	9			**Operational Year**	2018
Utility Company	Southern California Edison				
CO2 Intensity (lb/MWhr)	702.44	**CH4 Intensity (lb/MWhr)**	0.029	**N2O Intensity (lb/MWhr)**	0.006

1.3 User Entered Comments

Only CalEEMod defaults were used.

Project Characteristics - Project description

Land Use - Project description

Construction Phase - see Project assumptions

Off-road Equipment - Equipment assumed to operate 8 hr/day

Off-road Equipment - Equipment assumed to operate 8 hr/day

Off-road Equipment -

Off-road Equipment - Equipment assumed to operate 8 hr/day

Off-road Equipment - Equipment assumed to operate 8 hr/day

Trips and VMT - Added water truck trips

Demolition - Per project description

Vehicle Trips - trip rate based on trip generation survey data; 100% of trips assumed primary and C-C

Energy Use - See Project assumptions

Water And Wastewater - Per Project Description

Solid Waste - Per CalEEMod rate for gas/service station (3.82 ton/size/yr)

Land Use Change -

Sequestration - per Site Plan

Construction Off-road Equipment Mitigation - Water 3x daily per Rule 403

Water Mitigation - Per CalGreen

Waste Mitigation - Per Calrecycle website - Lakewood diversion rate 2006

2.0 Peak Daily Emissions

Peak Daily Construction Emissions

Peak Daily Construction Emissions

Lakewood Carwash - Los Angeles-South Coast County, Summary Report

		Unmitigated						Mitigated					
		ROG	NOX	CO	SO2	PM10	PM2.5	ROG	NOX	CO	SO2	PM10	PM2.5
Year	Phase	lb/day											
2017	Demolition	2.8674 W	27.2870 W	16.4499 S	0.0269 S	2.1010 W	1.6313 W	2.8674 W	27.2870 W	16.4499 S	0.0269 S	1.9293 W	1.6053 W
2017	Grading	2.1498 W	24.1856 W	9.5466 S	0.0199 S	7.6519 W	4.4202 W	2.1498 W	24.1856 W	9.5466 S	0.0199 S	3.7358 W	2.3747 W
2017	Building Construction	3.4446 W	23.5728 W	17.4998 S	0.0294 S	1.6996 W	1.4399 W	3.4446 W	23.5728 W	17.4998 S	0.0294 S	1.6996 W	1.4399 W
2018	Building Construction	3.0063 W	21.2593 W	16.7423 S	0.0293 S	1.4936 W	1.2438 W	3.0063 W	21.2593 W	16.7423 S	0.0293 S	1.4936 W	1.2438 W
2018	Paving	1.4847 W	12.0641 W	10.8124 S	0.0174 S	0.8400 W	0.6708 W	1.4847 W	12.0641 W	10.8124 S	0.0174 S	0.8400 W	0.6708 W
2018	Architectural Coating	8.0676 W	2.6928 W	2.6883 S	4.4600e-003 S	0.2459 S	0.2130 S	8.0676 W	2.6928 W	2.6883 S	4.4600e-003 S	0.2459 S	0.2130 S
	Peak Daily Total	8.0676 W	27.2870 W	17.4998 S	0.0294 S	7.6519 W	4.4202 W	8.0676 W	27.2870 W	17.4998 S	0.0294 S	3.7358 W	2.3747 W
	Air District Threshold												
	Exceed Significance?												

Peak Daily Operational Emissions

Peak Daily Operational Emissions

		Unmitigated						Mitigated					
		ROG	NOX	CO	SO2	PM10	PM2.5	ROG	NOX	CO	SO2	PM10	PM2.5
	Operational Activity	lb/day											
On-Site	Area	0.1744 S	1.0000e-005 S	8.2000e-004 S	0.0000 S	0.0000 S	0.0000 S	0.1744 S	1.0000e-005 S	8.2000e-004 S	0.0000 S	0.0000 S	0.0000 S
On-Site	Energy	2.0900e-003 S	0.0190 S	0.0160 S	1.1000e-004 S	1.4500e-003 S	1.4500e-003 S	2.0900e-003 S	0.0190 S	0.0160 S	1.1000e-004 S	1.4500e-003 S	1.4500e-003 S
Off-Site	Mobile	0.6827 S	3.0721 W	9.0221 S	0.0252 S	1.8691 W	0.5205 W	0.6827 S	3.0721 W	9.0221 S	0.0252 S	1.8691 W	0.5205 W
	Peak Daily Total	0.8591 S	3.0912 W	9.0389 S	0.0253 S	1.8706 W	0.5219 W	0.8591 S	3.0912 W	9.0389 S	0.0253 S	1.8706 W	0.5219 W
	Air District Threshold												
	Exceed Significance?												

3.0 Annual GHG Emissions

Lakewood Carwash - Los Angeles-South Coast County, Summary Report

Annual GHG

Annual GHG

		Unmitigated				Mitigated			
		CO2	CH4	N2O	CO2e	CO2	CH4	N2O	CO2e
GHG Activity	Year	MT/yr							
Construction	2017	135.3355	0.0275	0.0000	136.0225	135.3354	0.0275	0.0000	136.0223
Construction	2018	28.4791	5.7969e-003	0.0000	28.6240	28.4790	5.7969e-003	0.0000	28.6240
Operational	2018	466.6920	0.4966	4.2728e-003	480.3804	460.2804	0.3287	3.5380e-003	469.5515
	Total								
	Significance Threshold								
	Exceed Significance?								

Lakewood Carwash

Los Angeles-South Coast County, Summer

1.0 Project Characteristics

1.1 Land Usage

Land Uses	Size	Metric	Lot Acreage	Floor Surface Area	Population
Other Asphalt Surfaces	0.95	Acre	0.95	41,382.00	0
Automobile Care Center	3.90	1000sqft	0.09	3,900.00	0
User Defined Retail	3.10	User Defined Unit	0.07	3,105.00	0

1.2 Other Project Characteristics

Urbanization	Urban	**Wind Speed (m/s)**	2.2	**Precipitation Freq (Days)**	33
Climate Zone	9			**Operational Year**	2018
Utility Company	Southern California Edison				
CO2 Intensity (lb/MWhr)	702.44	**CH4 Intensity (lb/MWhr)**	0.029	**N2O Intensity (lb/MWhr)**	0.006

1.3 User Entered Comments & Non-Default Data

Lakewood Carwash - Los Angeles-South Coast County, Summer

Project Characteristics - Project description

Land Use - Project description

Construction Phase - see Project assumptions

Off-road Equipment - Equipment assumed to operate 8 hr/day

Off-road Equipment - Equipment assumed to operate 8 hr/day

Off-road Equipment -

Off-road Equipment - Equipment assumed to operate 8 hr/day

Off-road Equipment - Equipment assumed to operate 8 hr/day

Trips and VMT - Added water truck trips

Demolition - Per project description

Vehicle Trips - trip rate based on trip generation survey data; 100% of trips assumed primary and C-C

Energy Use - See Project assumptions

Water And Wastewater - Per Project Description

Solid Waste - Per CalEEMod rate for gas/service station (3.82 ton/size/yr)

Land Use Change -

Sequestration - per Site Plan

Construction Off-road Equipment Mitigation - Water 3x daily per Rule 403

Water Mitigation - Per CalGreen

Waste Mitigation - Per Calrecycle website - Lakewood diversion rate 2006

Table Name	Column Name	Default Value	New Value
tblConstDustMitigation	WaterUnpavedRoadVehicleSpeed	40	0
tblConstructionPhase	NumDays	200.00	100.00
tblConstructionPhase	PhaseEndDate	1/19/2018	1/20/2018
tblConstructionPhase	PhaseStartDate	1/20/2018	1/21/2018
tblEnergyUse	T24E	0.00	47.63
tblGrading	AcresOfGrading	2.00	1.50

Lakewood Carwash - Los Angeles-South Coast County, Summer

tblLandUse	BuildingSpaceSquareFeet	0.00	3,105.00
tblLandUse	LandUseSquareFeet	0.00	3,105.00
tblLandUse	LotAcreage	0.00	0.07
tblOffRoadEquipment	UsageHours	6.00	8.00
tblOffRoadEquipment	UsageHours	6.00	8.00
tblOffRoadEquipment	UsageHours	6.00	8.00
tblOffRoadEquipment	UsageHours	6.00	8.00
tblOffRoadEquipment	UsageHours	6.00	8.00
tblOffRoadEquipment	UsageHours	6.00	8.00
tblOffRoadEquipment	UsageHours	7.00	8.00
tblOffRoadEquipment	UsageHours	6.00	8.00
tblOffRoadEquipment	UsageHours	6.00	8.00
tblOffRoadEquipment	UsageHours	7.00	8.00
tblSequestration	NumberOfNewTrees	0.00	31.00
tblSolidWaste	SolidWasteGenerationRate	0.00	11.86
tblTripsAndVMT	VendorTripNumber	0.00	2.00
tblTripsAndVMT	VendorTripNumber	0.00	2.00
tblVehicleTrips	CC_TTP	48.00	100.00
tblVehicleTrips	CNW_TTP	19.00	0.00
tblVehicleTrips	CW_TTP	33.00	0.00
tblVehicleTrips	DV_TP	51.00	0.00
tblVehicleTrips	PB_TP	28.00	0.00
tblVehicleTrips	PR_TP	21.00	100.00
tblVehicleTrips	ST_TR	23.72	68.95
tblVehicleTrips	SU_TR	11.88	36.26
tblVehicleTrips	WD_TR	23.72	72.52
tblWater	IndoorWaterUseRate	0.00	4,196,280.00

2.0 Emissions Summary

2.1 Overall Construction (Maximum Daily Emission)

Unmitigated Construction

	ROG	NOx	CO	SO2	Fugitive PM10	Exhaust PM10	PM10 Total	Fugitive PM2.5	Exhaust PM2.5	PM2.5 Total	Bio- CO2	NBio- CO2	Total CO2	CH4	N2O	CO2e
Year	lb/day										lb/day					
2017	3.4297	27.2737	17.4998	0.0294	6.5220	1.6514	7.6519	3.3806	1.5439	4.4201	0.0000	2,793.8541	2,793.8541	0.6275	0.0000	2,807.2953
2018	8.0653	21.2481	16.7423	0.0293	0.2748	1.2187	1.4935	0.0740	1.1697	1.2437	0.0000	2,768.7107	2,768.7107	0.5146	0.0000	2,781.5750
Maximum	**8.0653**	**27.2737**	**17.4998**	**0.0294**	**6.5220**	**1.6514**	**7.6519**	**3.3806**	**1.5439**	**4.4201**	**0.0000**	**2,793.8541**	**2,793.8541**	**0.6275**	**0.0000**	**2,807.2953**

Mitigated Construction

	ROG	NOx	CO	SO2	Fugitive PM10	Exhaust PM10	PM10 Total	Fugitive PM2.5	Exhaust PM2.5	PM2.5 Total	Bio- CO2	NBio- CO2	Total CO2	CH4	N2O	CO2e
Year	lb/day										lb/day					
2017	3.4297	27.2737	17.4998	0.0294	2.6059	1.6514	3.7358	1.3351	1.5439	2.3747	0.0000	2,793.8541	2,793.8541	0.6275	0.0000	2,807.2953
2018	8.0653	21.2481	16.7423	0.0293	0.2748	1.2187	1.4935	0.0740	1.1697	1.2437	0.0000	2,768.7107	2,768.7107	0.5146	0.0000	2,781.5750
Maximum	**8.0653**	**27.2737**	**17.4998**	**0.0294**	**2.6059**	**1.6514**	**3.7358**	**1.3351**	**1.5439**	**2.3747**	**0.0000**	**2,793.8541**	**2,793.8541**	**0.6275**	**0.0000**	**2,807.2953**

Lakewood Carwash - Los Angeles-South Coast County, Summer

	ROG	NOx	CO	SO2	Fugitive PM10	Exhaust PM10	PM10 Total	Fugitive PM2.5	Exhaust PM2.5	PM2.5 Total	Bio- CO2	NBio-CO2	Total CO2	CH4	N20	CO2e
Percent Reduction	0.00	0.00	0.00	0.00	57.62	0.00	42.82	59.21	0.00	36.11	0.00	0.00	0.00	0.00	0.00	0.00

2.2 Overall Operational

Unmitigated Operational

	ROG	NOx	CO	SO2	Fugitive PM10	Exhaust PM10	PM10 Total	Fugitive PM2.5	Exhaust PM2.5	PM2.5 Total	Bio- CO2	NBio- CO2	Total CO2	CH4	N2O	CO2e
Category	lb/day										lb/day					
Area	0.1744	1.0000e-005	8.2000e-004	0.0000		0.0000	0.0000		0.0000	0.0000		1.7400e-003	1.7400e-003	0.0000		1.8600e-003
Energy	2.0900e-003	0.0190	0.0160	1.1000e-004		1.4500e-003	1.4500e-003		1.4500e-003	1.4500e-003		22.8280	22.8280	4.4000e-004	4.2000e-004	22.9637
Mobile	0.6827	2.9817	9.0221	0.0252	1.8392	0.0297	1.8689	0.4923	0.0280	0.5203		2,556.8775	2,556.8775	0.1556		2,560.7667
Total	**0.8591**	**3.0008**	**9.0389**	**0.0253**	**1.8392**	**0.0312**	**1.8703**	**0.4923**	**0.0294**	**0.5217**		**2,579.7072**	**2,579.7072**	**0.1560**	**4.2000e-004**	**2,583.7323**

Mitigated Operational

	ROG	NOx	CO	SO2	Fugitive PM10	Exhaust PM10	PM10 Total	Fugitive PM2.5	Exhaust PM2.5	PM2.5 Total	Bio- CO2	NBio- CO2	Total CO2	CH4	N2O	CO2e
Category	lb/day										lb/day					
Area	0.1744	1.0000e-005	8.2000e-004	0.0000		0.0000	0.0000		0.0000	0.0000		1.7400e-003	1.7400e-003	0.0000		1.8600e-003
Energy	2.0900e-003	0.0190	0.0160	1.1000e-004		1.4500e-003	1.4500e-003		1.4500e-003	1.4500e-003		22.8280	22.8280	4.4000e-004	4.2000e-004	22.9637
Mobile	0.6827	2.9817	9.0221	0.0252	1.8392	0.0297	1.8689	0.4923	0.0280	0.5203		2,556.8775	2,556.8775	0.1556		2,560.7667
Total	**0.8591**	**3.0008**	**9.0389**	**0.0253**	**1.8392**	**0.0312**	**1.8703**	**0.4923**	**0.0294**	**0.5217**		**2,579.7072**	**2,579.7072**	**0.1560**	**4.2000e-004**	**2,583.7323**

	ROG	NOx	CO	SO2	Fugitive PM10	Exhaust PM10	PM10 Total	Fugitive PM2.5	Exhaust PM2.5	PM2.5 Total	Bio- CO2	NBio-CO2	Total CO2	CH4	N20	CO2e
Percent Reduction	**0.00**	**0.00**	**0.00**	**0.00**	**0.00**	**0.00**	**0.00**	**0.00**	**0.00**	**0.00**	**0.00**	**0.00**	**0.00**	**0.00**	**0.00**	**0.00**

3.0 Construction Detail

Construction Phase

Phase Number	Phase Name	Phase Type	Start Date	End Date	Num Days Week	Num Days	Phase Description
1	Demolition	Demolition	8/1/2017	8/28/2017	5	20	
2	Grading	Grading	8/29/2017	9/1/2017	5	4	
3	Building Construction	Building Construction	9/2/2017	1/20/2018	5	100	
4	Paving	Paving	1/21/2018	2/2/2018	5	10	
5	Architectural Coating	Architectural Coating	2/3/2018	2/16/2018	5	10	

Acres of Grading (Site Preparation Phase): 0

Acres of Grading (Grading Phase): 1.5

Acres of Paving: 0.95

Residential Indoor: 0; Residential Outdoor: 0; Non-Residential Indoor: 10,508; Non-Residential Outdoor: 3,503; Striped Parking Area: 2,483 (Architectural Coating – sqft)

OffRoad Equipment

Phase Name	Offroad Equipment Type	Amount	Usage Hours	Horse Power	Load Factor
Demolition	Concrete/Industrial Saws	1	8.00	81	0.73
Demolition	Rubber Tired Dozers	1	8.00	247	0.40
Demolition	Tractors/Loaders/Backhoes	3	8.00	97	0.37
Grading	Graders	1	8.00	187	0.41
Grading	Rubber Tired Dozers	1	8.00	247	0.40
Grading	Tractors/Loaders/Backhoes	1	8.00	97	0.37
Building Construction	Cranes	1	8.00	231	0.29
Building Construction	Forklifts	1	8.00	89	0.20
Building Construction	Generator Sets	1	8.00	84	0.74
Building Construction	Tractors/Loaders/Backhoes	1	8.00	97	0.37
Building Construction	Welders	3	8.00	46	0.45
Paving	Cement and Mortar Mixers	1	8.00	9	0.56
Paving	Pavers	1	8.00	130	0.42
Paving	Paving Equipment	1	8.00	132	0.36
Paving	Rollers	1	8.00	80	0.38
Paving	Tractors/Loaders/Backhoes	1	8.00	97	0.37
Architectural Coating	Air Compressors	1	8.00	78	0.48

Trips and VMT

Phase Name	Offroad Equipment Count	Worker Trip Number	Vendor Trip Number	Hauling Trip Number	Worker Trip Length	Vendor Trip Length	Hauling Trip Length	Worker Vehicle Class	Vendor Vehicle Class	Hauling Vehicle Class
Demolition	5	13.00	0.00	26.00	14.70	6.90	20.00	LD_Mix	HDT_Mix	HHDT
Grading	3	8.00	2.00	0.00	14.70	6.90	20.00	LD_Mix	HDT_Mix	HHDT
Building Construction	7	20.00	8.00	0.00	14.70	6.90	20.00	LD_Mix	HDT_Mix	HHDT
Paving	5	13.00	2.00	0.00	14.70	6.90	20.00	LD_Mix	HDT_Mix	HHDT
Architectural Coating	1	4.00	0.00	0.00	14.70	6.90	20.00	LD_Mix	HDT_Mix	HHDT

3.1 Mitigation Measures Construction

Water Exposed Area

3.2 Demolition - 2017

Unmitigated Construction On-Site

	ROG	NOx	CO	SO2	Fugitive PM10	Exhaust PM10	PM10 Total	Fugitive PM2.5	Exhaust PM2.5	PM2.5 Total	Bio- CO2	NBio- CO2	Total CO2	CH4	N2O	CO2e
Category	lb/day										lb/day					
Fugitive Dust					0.2815	0.0000	0.2815	0.0426	0.0000	0.0426			0.0000			0.0000
Off-Road	2.7625	26.7594	15.5573	0.0241		1.6477	1.6477		1.5404	1.5404		2,421.4229	2,421.4229	0.6125		2,436.7347
Total	**2.7625**	**26.7594**	**15.5573**	**0.0241**	**0.2815**	**1.6477**	**1.9292**	**0.0426**	**1.5404**	**1.5830**		**2,421.4229**	**2,421.4229**	**0.6125**		**2,436.7347**

3.2 Demolition - 2017

Unmitigated Construction Off-Site

	ROG	NOx	CO	SO2	Fugitive PM10	Exhaust PM10	PM10 Total	Fugitive PM2.5	Exhaust PM2.5	PM2.5 Total	Bio- CO2	NBio- CO2	Total CO2	CH4	N2O	CO2e
Category	lb/day										lb/day					
Hauling	0.0147	0.4519	0.0923	1.0600e-003	0.0227	2.3900e-003	0.0251	6.2300e-003	2.2800e-003	8.5100e-003		114.7693	114.7693	8.0200e-003		114.9698
Vendor	0.0000	0.0000	0.0000	0.0000	0.0000	0.0000	0.0000	0.0000	0.0000	0.0000		0.0000	0.0000	0.0000		0.0000
Worker	0.0813	0.0624	0.8003	1.6900e-003	0.1453	1.3500e-003	0.1467	0.0385	1.2500e-003	0.0398		167.5593	167.5593	6.9600e-003		167.7332
Total	**0.0960**	**0.5142**	**0.8926**	**2.7500e-003**	**0.1680**	**3.7400e-003**	**0.1718**	**0.0448**	**3.5300e-003**	**0.0483**		**282.3286**	**282.3286**	**0.0150**		**282.7030**

Mitigated Construction On-Site

	ROG	NOx	CO	SO2	Fugitive PM10	Exhaust PM10	PM10 Total	Fugitive PM2.5	Exhaust PM2.5	PM2.5 Total	Bio- CO2	NBio- CO2	Total CO2	CH4	N2O	CO2e
Category	lb/day										lb/day					
Fugitive Dust					0.1098	0.0000	0.1098	0.0166	0.0000	0.0166			0.0000			0.0000
Off-Road	2.7625	26.7594	15.5573	0.0241		1.6477	1.6477		1.5404	1.5404	0.0000	2,421.4229	2,421.4229	0.6125		2,436.7347
Total	**2.7625**	**26.7594**	**15.5573**	**0.0241**	**0.1098**	**1.6477**	**1.7574**	**0.0166**	**1.5404**	**1.5570**	**0.0000**	**2,421.4229**	**2,421.4229**	**0.6125**		**2,436.7347**

3.2 Demolition - 2017

Mitigated Construction Off-Site

	ROG	NOx	CO	SO2	Fugitive PM10	Exhaust PM10	PM10 Total	Fugitive PM2.5	Exhaust PM2.5	PM2.5 Total	Bio- CO2	NBio- CO2	Total CO2	CH4	N2O	CO2e
Category	lb/day										lb/day					
Hauling	0.0147	0.4519	0.0923	1.0600e-003	0.0227	2.3900e-003	0.0251	6.2300e-003	2.2800e-003	8.5100e-003		114.7693	114.7693	8.0200e-003		114.9698
Vendor	0.0000	0.0000	0.0000	0.0000	0.0000	0.0000	0.0000	0.0000	0.0000	0.0000		0.0000	0.0000	0.0000		0.0000
Worker	0.0813	0.0624	0.8003	1.6900e-003	0.1453	1.3500e-003	0.1467	0.0385	1.2500e-003	0.0398		167.5593	167.5593	6.9600e-003		167.7332
Total	**0.0960**	**0.5142**	**0.8926**	**2.7500e-003**	**0.1680**	**3.7400e-003**	**0.1718**	**0.0448**	**3.5300e-003**	**0.0483**		**282.3286**	**282.3286**	**0.0150**		**282.7030**

3.3 Grading - 2017

Unmitigated Construction On-Site

	ROG	NOx	CO	SO2	Fugitive PM10	Exhaust PM10	PM10 Total	Fugitive PM2.5	Exhaust PM2.5	PM2.5 Total	Bio- CO2	NBio- CO2	Total CO2	CH4	N2O	CO2e
Category	lb/day										lb/day					
Fugitive Dust					6.4198	0.0000	6.4198	3.3532	0.0000	3.3532			0.0000			0.0000
Off-Road	2.0836	23.8814	8.9800	0.0183		1.1269	1.1269		1.0367	1.0367		1,873.4835	1,873.4835	0.5740		1,887.8343
Total	**2.0836**	**23.8814**	**8.9800**	**0.0183**	**6.4198**	**1.1269**	**7.5466**	**3.3532**	**1.0367**	**4.3899**		**1,873.4835**	**1,873.4835**	**0.5740**		**1,887.8343**

3.3 Grading - 2017

Unmitigated Construction Off-Site

	ROG	NOx	CO	SO2	Fugitive PM10	Exhaust PM10	PM10 Total	Fugitive PM2.5	Exhaust PM2.5	PM2.5 Total	Bio- CO2	NBio- CO2	Total CO2	CH4	N2O	CO2e
Category	lb/day										lb/day					
Hauling	0.0000	0.0000	0.0000	0.0000	0.0000	0.0000	0.0000	0.0000	0.0000	0.0000		0.0000	0.0000	0.0000		0.0000
Vendor	0.0104	0.2608	0.0742	5.3000e-004	0.0128	2.1800e-003	0.0150	3.6900e-003	2.0900e-003	5.7800e-003		56.5186	56.5186	3.9100e-003		56.6163
Worker	0.0500	0.0384	0.4925	1.0400e-003	0.0894	8.3000e-004	0.0903	0.0237	7.7000e-004	0.0245		103.1134	103.1134	4.2800e-003		103.2204
Total	**0.0605**	**0.2991**	**0.5667**	**1.5700e-003**	**0.1022**	**3.0100e-003**	**0.1052**	**0.0274**	**2.8600e-003**	**0.0303**		**159.6320**	**159.6320**	**8.1900e-003**		**159.8367**

Mitigated Construction On-Site

	ROG	NOx	CO	SO2	Fugitive PM10	Exhaust PM10	PM10 Total	Fugitive PM2.5	Exhaust PM2.5	PM2.5 Total	Bio- CO2	NBio- CO2	Total CO2	CH4	N2O	CO2e
Category	lb/day										lb/day					
Fugitive Dust					2.5037	0.0000	2.5037	1.3077	0.0000	1.3077			0.0000			0.0000
Off-Road	2.0836	23.8814	8.9800	0.0183		1.1269	1.1269		1.0367	1.0367	0.0000	1,873.4835	1,873.4835	0.5740		1,887.8343
Total	**2.0836**	**23.8814**	**8.9800**	**0.0183**	**2.5037**	**1.1269**	**3.6306**	**1.3077**	**1.0367**	**2.3444**	**0.0000**	**1,873.4835**	**1,873.4835**	**0.5740**		**1,887.8343**

3.3 Grading - 2017

Mitigated Construction Off-Site

	ROG	NOx	CO	SO2	Fugitive PM10	Exhaust PM10	PM10 Total	Fugitive PM2.5	Exhaust PM2.5	PM2.5 Total	Bio- CO2	NBio- CO2	Total CO2	CH4	N2O	CO2e
Category	lb/day										lb/day					
Hauling	0.0000	0.0000	0.0000	0.0000	0.0000	0.0000	0.0000	0.0000	0.0000	0.0000		0.0000	0.0000	0.0000		0.0000
Vendor	0.0104	0.2608	0.0742	5.3000e-004	0.0128	2.1800e-003	0.0150	3.6900e-003	2.0900e-003	5.7800e-003		56.5186	56.5186	3.9100e-003		56.6163
Worker	0.0500	0.0384	0.4925	1.0400e-003	0.0894	8.3000e-004	0.0903	0.0237	7.7000e-004	0.0245		103.1134	103.1134	4.2800e-003		103.2204
Total	**0.0605**	**0.2991**	**0.5667**	**1.5700e-003**	**0.1022**	**3.0100e-003**	**0.1052**	**0.0274**	**2.8600e-003**	**0.0303**		**159.6320**	**159.6320**	**8.1900e-003**		**159.8367**

3.4 Building Construction - 2017

Unmitigated Construction On-Site

	ROG	NOx	CO	SO2	Fugitive PM10	Exhaust PM10	PM10 Total	Fugitive PM2.5	Exhaust PM2.5	PM2.5 Total	Bio- CO2	NBio- CO2	Total CO2	CH4	N2O	CO2e
Category	lb/day										lb/day					
Off-Road	3.2628	22.4198	15.9718	0.0246		1.4139	1.4139		1.3555	1.3555		2,309.9962	2,309.9962	0.5113		2,322.7791
Total	**3.2628**	**22.4198**	**15.9718**	**0.0246**		**1.4139**	**1.4139**		**1.3555**	**1.3555**		**2,309.9962**	**2,309.9962**	**0.5113**		**2,322.7791**

3.4 Building Construction - 2017

Unmitigated Construction Off-Site

	ROG	NOx	CO	SO2	Fugitive PM10	Exhaust PM10	PM10 Total	Fugitive PM2.5	Exhaust PM2.5	PM2.5 Total	Bio- CO2	NBio- CO2	Total CO2	CH4	N2O	CO2e
Category	lb/day										lb/day					
Hauling	0.0000	0.0000	0.0000	0.0000	0.0000	0.0000	0.0000	0.0000	0.0000	0.0000		0.0000	0.0000	0.0000		0.0000
Vendor	0.0418	1.0431	0.2968	2.1200e-003	0.0512	8.7400e-003	0.0600	0.0147	8.3600e-003	0.0231		226.0743	226.0743	0.0156		226.4652
Worker	0.1251	0.0959	1.2312	2.5900e-003	0.2236	2.0800e-003	0.2256	0.0593	1.9200e-003	0.0612		257.7835	257.7835	0.0107		258.0511
Total	**0.1668**	**1.1390**	**1.5280**	**4.7100e-003**	**0.2748**	**0.0108**	**0.2856**	**0.0740**	**0.0103**	**0.0843**		**483.8579**	**483.8579**	**0.0263**		**484.5162**

Mitigated Construction On-Site

	ROG	NOx	CO	SO2	Fugitive PM10	Exhaust PM10	PM10 Total	Fugitive PM2.5	Exhaust PM2.5	PM2.5 Total	Bio- CO2	NBio- CO2	Total CO2	CH4	N2O	CO2e
Category	lb/day										lb/day					
Off-Road	3.2628	22.4198	15.9718	0.0246		1.4139	1.4139		1.3555	1.3555	0.0000	2,309.9962	2,309.9962	0.5113		2,322.7791
Total	**3.2628**	**22.4198**	**15.9718**	**0.0246**		**1.4139**	**1.4139**		**1.3555**	**1.3555**	**0.0000**	**2,309.9962**	**2,309.9962**	**0.5113**		**2,322.7791**

3.4 Building Construction - 2017

Mitigated Construction Off-Site

	ROG	NOx	CO	SO2	Fugitive PM10	Exhaust PM10	PM10 Total	Fugitive PM2.5	Exhaust PM2.5	PM2.5 Total	Bio- CO2	NBio- CO2	Total CO2	CH4	N2O	CO2e
Category	lb/day										lb/day					
Hauling	0.0000	0.0000	0.0000	0.0000	0.0000	0.0000	0.0000	0.0000	0.0000	0.0000		0.0000	0.0000	0.0000		0.0000
Vendor	0.0418	1.0431	0.2968	2.1200e-003	0.0512	8.7400e-003	0.0600	0.0147	8.3600e-003	0.0231		226.0743	226.0743	0.0156		226.4652
Worker	0.1251	0.0959	1.2312	2.5900e-003	0.2236	2.0800e-003	0.2256	0.0593	1.9200e-003	0.0612		257.7835	257.7835	0.0107		258.0511
Total	**0.1668**	**1.1390**	**1.5280**	**4.7100e-003**	**0.2748**	**0.0108**	**0.2856**	**0.0740**	**0.0103**	**0.0843**		**483.8579**	**483.8579**	**0.0263**		**484.5162**

3.4 Building Construction - 2018

Unmitigated Construction On-Site

	ROG	NOx	CO	SO2	Fugitive PM10	Exhaust PM10	PM10 Total	Fugitive PM2.5	Exhaust PM2.5	PM2.5 Total	Bio- CO2	NBio- CO2	Total CO2	CH4	N2O	CO2e
Category	lb/day										lb/day					
Off-Road	2.8456	20.1842	15.3941	0.0246		1.2098	1.2098		1.1612	1.1612		2,292.6292	2,292.6292	0.4903		2,304.8874
Total	**2.8456**	**20.1842**	**15.3941**	**0.0246**		**1.2098**	**1.2098**		**1.1612**	**1.1612**		**2,292.6292**	**2,292.6292**	**0.4903**		**2,304.8874**

3.4 Building Construction - 2018

Unmitigated Construction Off-Site

	ROG	NOx	CO	SO2	Fugitive PM10	Exhaust PM10	PM10 Total	Fugitive PM2.5	Exhaust PM2.5	PM2.5 Total	Bio- CO2	NBio- CO2	Total CO2	CH4	N2O	CO2e
Category	lb/day										lb/day					
Hauling	0.0000	0.0000	0.0000	0.0000	0.0000	0.0000	0.0000	0.0000	0.0000	0.0000		0.0000	0.0000	0.0000		0.0000
Vendor	0.0368	0.9805	0.2681	2.1100e-003	0.0512	6.9100e-003	0.0581	0.0148	6.6100e-003	0.0214		225.3435	225.3435	0.0148		225.7145
Worker	0.1105	0.0834	1.0802	2.5200e-003	0.2236	1.9900e-003	0.2256	0.0593	1.8400e-003	0.0611		250.7380	250.7380	9.4000e-003		250.9731
Total	**0.1473**	**1.0639**	**1.3482**	**4.6300e-003**	**0.2748**	**8.9000e-003**	**0.2837**	**0.0740**	**8.4500e-003**	**0.0825**		**476.0815**	**476.0815**	**0.0242**		**476.6876**

Mitigated Construction On-Site

	ROG	NOx	CO	SO2	Fugitive PM10	Exhaust PM10	PM10 Total	Fugitive PM2.5	Exhaust PM2.5	PM2.5 Total	Bio- CO2	NBio- CO2	Total CO2	CH4	N2O	CO2e
Category	lb/day										lb/day					
Off-Road	2.8456	20.1842	15.3941	0.0246		1.2098	1.2098		1.1612	1.1612	0.0000	2,292.6292	2,292.6292	0.4903		2,304.8874
Total	**2.8456**	**20.1842**	**15.3941**	**0.0246**		**1.2098**	**1.2098**		**1.1612**	**1.1612**	**0.0000**	**2,292.6292**	**2,292.6292**	**0.4903**		**2,304.8874**

3.4 Building Construction - 2018

Mitigated Construction Off-Site

	ROG	NOx	CO	SO2	Fugitive PM10	Exhaust PM10	PM10 Total	Fugitive PM2.5	Exhaust PM2.5	PM2.5 Total	Bio- CO2	NBio- CO2	Total CO2	CH4	N2O	CO2e
Category	lb/day										lb/day					
Hauling	0.0000	0.0000	0.0000	0.0000	0.0000	0.0000	0.0000	0.0000	0.0000	0.0000		0.0000	0.0000	0.0000		0.0000
Vendor	0.0368	0.9805	0.2681	2.1100e-003	0.0512	6.9100e-003	0.0581	0.0148	6.6100e-003	0.0214		225.3435	225.3435	0.0148		225.7145
Worker	0.1105	0.0834	1.0802	2.5200e-003	0.2236	1.9900e-003	0.2256	0.0593	1.8400e-003	0.0611		250.7380	250.7380	9.4000e-003		250.9731
Total	**0.1473**	**1.0639**	**1.3482**	**4.6300e-003**	**0.2748**	**8.9000e-003**	**0.2837**	**0.0740**	**8.4500e-003**	**0.0825**		**476.0815**	**476.0815**	**0.0242**		**476.6876**

3.5 Paving - 2018

Unmitigated Construction On-Site

	ROG	NOx	CO	SO2	Fugitive PM10	Exhaust PM10	PM10 Total	Fugitive PM2.5	Exhaust PM2.5	PM2.5 Total	Bio- CO2	NBio- CO2	Total CO2	CH4	N2O	CO2e
Category	lb/day										lb/day					
Off-Road	1.1467	11.7584	10.0433	0.0152		0.6789	0.6789		0.6257	0.6257		1,510.3366	1,510.3366	0.4597		1,521.8293
Paving	0.2489					0.0000	0.0000		0.0000	0.0000			0.0000			0.0000
Total	**1.3956**	**11.7584**	**10.0433**	**0.0152**		**0.6789**	**0.6789**		**0.6257**	**0.6257**		**1,510.3366**	**1,510.3366**	**0.4597**		**1,521.8293**

3.5 Paving - 2018

Unmitigated Construction Off-Site

	ROG	NOx	CO	SO2	Fugitive PM10	Exhaust PM10	PM10 Total	Fugitive PM2.5	Exhaust PM2.5	PM2.5 Total	Bio- CO2	NBio- CO2	Total CO2	CH4	N2O	CO2e
Category	lb/day										lb/day					
Hauling	0.0000	0.0000	0.0000	0.0000	0.0000	0.0000	0.0000	0.0000	0.0000	0.0000		0.0000	0.0000	0.0000		0.0000
Vendor	9.2000e-003	0.2451	0.0670	5.3000e-004	0.0128	1.7300e-003	0.0145	3.6900e-003	1.6500e-003	5.3400e-003		56.3359	56.3359	3.7100e-003		56.4286
Worker	0.0718	0.0542	0.7021	1.6400e-003	0.1453	1.3000e-003	0.1466	0.0385	1.1900e-003	0.0397		162.9797	162.9797	6.1100e-003		163.1325
Total	**0.0810**	**0.2993**	**0.7691**	**2.1700e-003**	**0.1581**	**3.0300e-003**	**0.1611**	**0.0422**	**2.8400e-003**	**0.0451**		**219.3156**	**219.3156**	**9.8200e-003**		**219.5611**

Mitigated Construction On-Site

	ROG	NOx	CO	SO2	Fugitive PM10	Exhaust PM10	PM10 Total	Fugitive PM2.5	Exhaust PM2.5	PM2.5 Total	Bio- CO2	NBio- CO2	Total CO2	CH4	N2O	CO2e
Category	lb/day										lb/day					
Off-Road	1.1467	11.7584	10.0433	0.0152		0.6789	0.6789		0.6257	0.6257	0.0000	1,510.3366	1,510.3366	0.4597		1,521.8293
Paving	0.2489					0.0000	0.0000		0.0000	0.0000			0.0000			0.0000
Total	**1.3956**	**11.7584**	**10.0433**	**0.0152**		**0.6789**	**0.6789**		**0.6257**	**0.6257**	**0.0000**	**1,510.3366**	**1,510.3366**	**0.4597**		**1,521.8293**

3.5 Paving - 2018

Mitigated Construction Off-Site

	ROG	NOx	CO	SO2	Fugitive PM10	Exhaust PM10	PM10 Total	Fugitive PM2.5	Exhaust PM2.5	PM2.5 Total	Bio- CO2	NBio- CO2	Total CO2	CH4	N2O	CO2e
Category	lb/day										lb/day					
Hauling	0.0000	0.0000	0.0000	0.0000	0.0000	0.0000	0.0000	0.0000	0.0000	0.0000		0.0000	0.0000	0.0000		0.0000
Vendor	9.2000e-003	0.2451	0.0670	5.3000e-004	0.0128	1.7300e-003	0.0145	3.6900e-003	1.6500e-003	5.3400e-003		56.3359	56.3359	3.7100e-003		56.4286
Worker	0.0718	0.0542	0.7021	1.6400e-003	0.1453	1.3000e-003	0.1466	0.0385	1.1900e-003	0.0397		162.9797	162.9797	6.1100e-003		163.1325
Total	**0.0810**	**0.2993**	**0.7691**	**2.1700e-003**	**0.1581**	**3.0300e-003**	**0.1611**	**0.0422**	**2.8400e-003**	**0.0451**		**219.3156**	**219.3156**	**9.8200e-003**		**219.5611**

3.6 Architectural Coating - 2018

Unmitigated Construction On-Site

	ROG	NOx	CO	SO2	Fugitive PM10	Exhaust PM10	PM10 Total	Fugitive PM2.5	Exhaust PM2.5	PM2.5 Total	Bio- CO2	NBio- CO2	Total CO2	CH4	N2O	CO2e
Category	lb/day										lb/day					
Archit. Coating	7.6450					0.0000	0.0000		0.0000	0.0000			0.0000			0.0000
Off-Road	0.3982	2.6743	2.4723	3.9600e-003		0.2007	0.2007		0.2007	0.2007		375.2647	375.2647	0.0357		376.1562
Total	**8.0432**	**2.6743**	**2.4723**	**3.9600e-003**		**0.2007**	**0.2007**		**0.2007**	**0.2007**		**375.2647**	**375.2647**	**0.0357**		**376.1562**

3.6 Architectural Coating - 2018

Unmitigated Construction Off-Site

	ROG	NOx	CO	SO2	Fugitive PM10	Exhaust PM10	PM10 Total	Fugitive PM2.5	Exhaust PM2.5	PM2.5 Total	Bio- CO2	NBio- CO2	Total CO2	CH4	N2O	CO2e
Category	lb/day										lb/day					
Hauling	0.0000	0.0000	0.0000	0.0000	0.0000	0.0000	0.0000	0.0000	0.0000	0.0000		0.0000	0.0000	0.0000		0.0000
Vendor	0.0000	0.0000	0.0000	0.0000	0.0000	0.0000	0.0000	0.0000	0.0000	0.0000		0.0000	0.0000	0.0000		0.0000
Worker	0.0221	0.0167	0.2160	5.0000e-004	0.0447	4.0000e-004	0.0451	0.0119	3.7000e-004	0.0122		50.1476	50.1476	1.8800e-003		50.1946
Total	**0.0221**	**0.0167**	**0.2160**	**5.0000e-004**	**0.0447**	**4.0000e-004**	**0.0451**	**0.0119**	**3.7000e-004**	**0.0122**		**50.1476**	**50.1476**	**1.8800e-003**		**50.1946**

Mitigated Construction On-Site

	ROG	NOx	CO	SO2	Fugitive PM10	Exhaust PM10	PM10 Total	Fugitive PM2.5	Exhaust PM2.5	PM2.5 Total	Bio- CO2	NBio- CO2	Total CO2	CH4	N2O	CO2e
Category	lb/day										lb/day					
Archit. Coating	7.6450					0.0000	0.0000		0.0000	0.0000			0.0000			0.0000
Off-Road	0.3982	2.6743	2.4723	3.9600e-003		0.2007	0.2007		0.2007	0.2007	0.0000	375.2647	375.2647	0.0357		376.1562
Total	**8.0432**	**2.6743**	**2.4723**	**3.9600e-003**		**0.2007**	**0.2007**		**0.2007**	**0.2007**	**0.0000**	**375.2647**	**375.2647**	**0.0357**		**376.1562**

3.6 Architectural Coating - 2018

Mitigated Construction Off-Site

	ROG	NOx	CO	SO2	Fugitive PM10	Exhaust PM10	PM10 Total	Fugitive PM2.5	Exhaust PM2.5	PM2.5 Total	Bio- CO2	NBio- CO2	Total CO2	CH4	N2O	CO2e
Category	lb/day										lb/day					
Hauling	0.0000	0.0000	0.0000	0.0000	0.0000	0.0000	0.0000	0.0000	0.0000	0.0000		0.0000	0.0000	0.0000		0.0000
Vendor	0.0000	0.0000	0.0000	0.0000	0.0000	0.0000	0.0000	0.0000	0.0000	0.0000		0.0000	0.0000	0.0000		0.0000
Worker	0.0221	0.0167	0.2160	5.0000e-004	0.0447	4.0000e-004	0.0451	0.0119	3.7000e-004	0.0122		50.1476	50.1476	1.8800e-003		50.1946
Total	**0.0221**	**0.0167**	**0.2160**	**5.0000e-004**	**0.0447**	**4.0000e-004**	**0.0451**	**0.0119**	**3.7000e-004**	**0.0122**		**50.1476**	**50.1476**	**1.8800e-003**		**50.1946**

4.0 Operational Detail - Mobile

4.1 Mitigation Measures Mobile

	ROG	NOx	CO	SO2	Fugitive PM10	Exhaust PM10	PM10 Total	Fugitive PM2.5	Exhaust PM2.5	PM2.5 Total	Bio- CO2	NBio- CO2	Total CO2	CH4	N2O	CO2e
Category	lb/day										lb/day					
Mitigated	0.6827	2.9817	9.0221	0.0252	1.8392	0.0297	1.8689	0.4923	0.0280	0.5203		2,556.8775	2,556.8775	0.1556		2,560.7667
Unmitigated	0.6827	2.9817	9.0221	0.0252	1.8392	0.0297	1.8689	0.4923	0.0280	0.5203		2,556.8775	2,556.8775	0.1556		2,560.7667

4.2 Trip Summary Information

	Average Daily Trip Rate			Unmitigated	Mitigated
Land Use	Weekday	Saturday	Sunday	Annual VMT	Annual VMT
Automobile Care Center	282.83	268.91	141.41	796,924	796,924
Other Asphalt Surfaces	0.00	0.00	0.00		
User Defined Retail	0.00	0.00	0.00		
Total	282.83	268.91	141.41	796,924	796,924

4.3 Trip Type Information

	Miles			Trip %			Trip Purpose %		
Land Use	H-W or C-W	H-S or C-C	H-O or C-NW	H-W or C-W	H-S or C-C	H-O or C-NW	Primary	Diverted	Pass-by
Automobile Care Center	16.60	8.40	6.90	0.00	100.00	0.00	100	0	0
Other Asphalt Surfaces	16.60	8.40	6.90	0.00	0.00	0.00	0	0	0
User Defined Retail	16.60	8.40	6.90	0.00	0.00	0.00	0	0	0

4.4 Fleet Mix

Land Use	LDA	LDT1	LDT2	MDV	LHD1	LHD2	MHD	HHD	OBUS	UBUS	MCY	SBUS	MH
Other Asphalt Surfaces	0.547972	0.046127	0.199330	0.125604	0.017697	0.005953	0.018360	0.027618	0.002341	0.002583	0.004804	0.000667	0.000944
Automobile Care Center	0.547972	0.046127	0.199330	0.125604	0.017697	0.005953	0.018360	0.027618	0.002341	0.002583	0.004804	0.000667	0.000944
User Defined Retail	0.547972	0.046127	0.199330	0.125604	0.017697	0.005953	0.018360	0.027618	0.002341	0.002583	0.004804	0.000667	0.000944

5.0 Energy Detail

Historical Energy Use: N

5.1 Mitigation Measures Energy

	ROG	NOx	CO	SO2	Fugitive PM10	Exhaust PM10	PM10 Total	Fugitive PM2.5	Exhaust PM2.5	PM2.5 Total	Bio- CO2	NBio- CO2	Total CO2	CH4	N2O	CO2e
Category	lb/day										lb/day					
NaturalGas Mitigated	2.0900e-003	0.0190	0.0160	1.1000e-004		1.4500e-003	1.4500e-003		1.4500e-003	1.4500e-003		22.8280	22.8280	4.4000e-004	4.2000e-004	22.9637
NaturalGas Unmitigated	2.0900e-003	0.0190	0.0160	1.1000e-004		1.4500e-003	1.4500e-003		1.4500e-003	1.4500e-003		22.8280	22.8280	4.4000e-004	4.2000e-004	22.9637

5.2 Energy by Land Use - NaturalGas

Unmitigated

	NaturalGas Use	ROG	NOx	CO	SO2	Fugitive PM10	Exhaust PM10	PM10 Total	Fugitive PM2.5	Exhaust PM2.5	PM2.5 Total	Bio- CO2	NBio- CO2	Total CO2	CH4	N2O	CO2e
Land Use	kBTU/yr	lb/day										lb/day					
Automobile Care Center	194.038	2.0900e-003	0.0190	0.0160	1.1000e-004		1.4500e-003	1.4500e-003		1.4500e-003	1.4500e-003		22.8280	22.8280	4.4000e-004	4.2000e-004	22.9637
Other Asphalt Surfaces	0	0.0000	0.0000	0.0000	0.0000		0.0000	0.0000		0.0000	0.0000		0.0000	0.0000	0.0000	0.0000	0.0000
User Defined Retail	0	0.0000	0.0000	0.0000	0.0000		0.0000	0.0000		0.0000	0.0000		0.0000	0.0000	0.0000	0.0000	0.0000
Total		**2.0900e-003**	**0.0190**	**0.0160**	**1.1000e-004**		**1.4500e-003**	**1.4500e-003**		**1.4500e-003**	**1.4500e-003**		**22.8280**	**22.8280**	**4.4000e-004**	**4.2000e-004**	**22.9637**

Mitigated

	NaturalGas Use	ROG	NOx	CO	SO2	Fugitive PM10	Exhaust PM10	PM10 Total	Fugitive PM2.5	Exhaust PM2.5	PM2.5 Total	Bio- CO2	NBio- CO2	Total CO2	CH4	N2O	CO2e
Land Use	kBTU/yr	lb/day										lb/day					
Automobile Care Center	0.194038	2.0900e-003	0.0190	0.0160	1.1000e-004		1.4500e-003	1.4500e-003		1.4500e-003	1.4500e-003		22.8280	22.8280	4.4000e-004	4.2000e-004	22.9637
Other Asphalt Surfaces	0	0.0000	0.0000	0.0000	0.0000		0.0000	0.0000		0.0000	0.0000		0.0000	0.0000	0.0000	0.0000	0.0000
User Defined Retail	0	0.0000	0.0000	0.0000	0.0000		0.0000	0.0000		0.0000	0.0000		0.0000	0.0000	0.0000	0.0000	0.0000
Total		**2.0900e-003**	**0.0190**	**0.0160**	**1.1000e-004**		**1.4500e-003**	**1.4500e-003**		**1.4500e-003**	**1.4500e-003**		**22.8280**	**22.8280**	**4.4000e-004**	**4.2000e-004**	**22.9637**

6.0 Area Detail

6.1 Mitigation Measures Area

	ROG	NOx	CO	SO2	Fugitive PM10	Exhaust PM10	PM10 Total	Fugitive PM2.5	Exhaust PM2.5	PM2.5 Total	Bio- CO2	NBio- CO2	Total CO2	CH4	N2O	CO2e
Category	lb/day										lb/day					
Mitigated	0.1744	1.0000e-005	8.2000e-004	0.0000		0.0000	0.0000		0.0000	0.0000		1.7400e-003	1.7400e-003	0.0000		1.8600e-003
Unmitigated	0.1744	1.0000e-005	8.2000e-004	0.0000		0.0000	0.0000		0.0000	0.0000		1.7400e-003	1.7400e-003	0.0000		1.8600e-003

6.2 Area by SubCategory

Unmitigated

	ROG	NOx	CO	SO2	Fugitive PM10	Exhaust PM10	PM10 Total	Fugitive PM2.5	Exhaust PM2.5	PM2.5 Total	Bio- CO2	NBio- CO2	Total CO2	CH4	N2O	CO2e
SubCategory	lb/day										lb/day					
Architectural Coating	0.0210					0.0000	0.0000		0.0000	0.0000			0.0000			0.0000
Consumer Products	0.1534					0.0000	0.0000		0.0000	0.0000			0.0000			0.0000
Landscaping	8.0000e-005	1.0000e-005	8.2000e-004	0.0000		0.0000	0.0000		0.0000	0.0000		1.7400e-003	1.7400e-003	0.0000		1.8600e-003
Total	**0.1744**	**1.0000e-005**	**8.2000e-004**	**0.0000**		**0.0000**	**0.0000**		**0.0000**	**0.0000**		**1.7400e-003**	**1.7400e-003**	**0.0000**		**1.8600e-003**

6.2 Area by SubCategory

Mitigated

	ROG	NOx	CO	SO2	Fugitive PM10	Exhaust PM10	PM10 Total	Fugitive PM2.5	Exhaust PM2.5	PM2.5 Total	Bio- CO2	NBio- CO2	Total CO2	CH4	N2O	CO2e
SubCategory	lb/day										lb/day					
Architectural Coating	0.0210					0.0000	0.0000		0.0000	0.0000			0.0000			0.0000
Consumer Products	0.1534					0.0000	0.0000		0.0000	0.0000			0.0000			0.0000
Landscaping	8.0000e-005	1.0000e-005	8.2000e-004	0.0000		0.0000	0.0000		0.0000	0.0000		1.7400e-003	1.7400e-003	0.0000		1.8600e-003
Total	**0.1744**	**1.0000e-005**	**8.2000e-004**	**0.0000**		**0.0000**	**0.0000**		**0.0000**	**0.0000**		**1.7400e-003**	**1.7400e-003**	**0.0000**		**1.8600e-003**

7.0 Water Detail

7.1 Mitigation Measures Water

Apply Water Conservation Strategy

8.0 Waste Detail

8.1 Mitigation Measures Waste

Institute Recycling and Composting Services

9.0 Operational Offroad

Equipment Type	Number	Hours/Day	Days/Year	Horse Power	Load Factor	Fuel Type

10.0 Stationary Equipment

Fire Pumps and Emergency Generators

Equipment Type	Number	Hours/Day	Hours/Year	Horse Power	Load Factor	Fuel Type

Boilers

Equipment Type	Number	Heat Input/Day	Heat Input/Year	Boiler Rating	Fuel Type

User Defined Equipment

Equipment Type	Number

11.0 Vegetation

Lakewood Carwash

Los Angeles-South Coast County, Winter

1.0 Project Characteristics

1.1 Land Usage

Land Uses	Size	Metric	Lot Acreage	Floor Surface Area	Population
Other Asphalt Surfaces	0.95	Acre	0.95	41,382.00	0
Automobile Care Center	3.90	1000sqft	0.09	3,900.00	0
User Defined Retail	3.10	User Defined Unit	0.07	3,105.00	0

1.2 Other Project Characteristics

Urbanization	Urban	**Wind Speed (m/s)**	2.2	**Precipitation Freq (Days)**	33
Climate Zone	9			**Operational Year**	2018
Utility Company	Southern California Edison				
CO2 Intensity (lb/MWhr)	702.44	**CH4 Intensity (lb/MWhr)**	0.029	**N2O Intensity (lb/MWhr)**	0.006

1.3 User Entered Comments & Non-Default Data

Project Characteristics - Project description

Land Use - Project description

Construction Phase - see Project assumptions

Off-road Equipment - Equipment assumed to operate 8 hr/day

Off-road Equipment - Equipment assumed to operate 8 hr/day

Off-road Equipment -

Off-road Equipment - Equipment assumed to operate 8 hr/day

Off-road Equipment - Equipment assumed to operate 8 hr/day

Trips and VMT - Added water truck trips

Demolition - Per project description

Vehicle Trips - trip rate based on trip generation survey data; 100% of trips assumed primary and C-C

Energy Use - See Project assumptions

Water And Wastewater - Per Project Description

Solid Waste - Per CalEEMod rate for gas/service station (3.82 ton/size/yr)

Land Use Change -

Sequestration - per Site Plan

Construction Off-road Equipment Mitigation - Water 3x daily per Rule 403

Water Mitigation - Per CalGreen

Waste Mitigation - Per Calrecycle website - Lakewood diversion rate 2006

Table Name	Column Name	Default Value	New Value
tblConstDustMitigation	WaterUnpavedRoadVehicleSpeed	40	0
tblConstructionPhase	NumDays	200.00	100.00
tblConstructionPhase	PhaseEndDate	1/19/2018	1/20/2018
tblConstructionPhase	PhaseStartDate	1/20/2018	1/21/2018
tblEnergyUse	T24E	0.00	47.63
tblGrading	AcresOfGrading	2.00	1.50

Lakewood Carwash - Los Angeles-South Coast County, Winter

tblLandUse	BuildingSpaceSquareFeet	0.00	3,105.00
tblLandUse	LandUseSquareFeet	0.00	3,105.00
tblLandUse	LotAcreage	0.00	0.07
tblOffRoadEquipment	UsageHours	6.00	8.00
tblOffRoadEquipment	UsageHours	6.00	8.00
tblOffRoadEquipment	UsageHours	6.00	8.00
tblOffRoadEquipment	UsageHours	6.00	8.00
tblOffRoadEquipment	UsageHours	6.00	8.00
tblOffRoadEquipment	UsageHours	6.00	8.00
tblOffRoadEquipment	UsageHours	7.00	8.00
tblOffRoadEquipment	UsageHours	6.00	8.00
tblOffRoadEquipment	UsageHours	6.00	8.00
tblOffRoadEquipment	UsageHours	7.00	8.00
tblSequestration	NumberOfNewTrees	0.00	31.00
tblSolidWaste	SolidWasteGenerationRate	0.00	11.86
tblTripsAndVMT	VendorTripNumber	0.00	2.00
tblTripsAndVMT	VendorTripNumber	0.00	2.00
tblVehicleTrips	CC_TTP	48.00	100.00
tblVehicleTrips	CNW_TTP	19.00	0.00
tblVehicleTrips	CW_TTP	33.00	0.00
tblVehicleTrips	DV_TP	51.00	0.00
tblVehicleTrips	PB_TP	28.00	0.00
tblVehicleTrips	PR_TP	21.00	100.00
tblVehicleTrips	ST_TR	23.72	68.95
tblVehicleTrips	SU_TR	11.88	36.26
tblVehicleTrips	WD_TR	23.72	72.52
tblWater	IndoorWaterUseRate	0.00	4,196,280.00

2.0 Emissions Summary

2.1 Overall Construction (Maximum Daily Emission)

Unmitigated Construction

	ROG	NOx	CO	SO2	Fugitive PM10	Exhaust PM10	PM10 Total	Fugitive PM2.5	Exhaust PM2.5	PM2.5 Total	Bio- CO2	NBio- CO2	Total CO2	CH4	N2O	CO2e
Year	lb/day										lb/day					
2017	3.4446	27.2870	17.4369	0.0292	6.5220	1.6514	7.6519	3.3806	1.5439	4.4202	0.0000	2,772.9695	2,772.9695	0.6274	0.0000	2,786.4227
2018	8.0676	21.2593	16.6833	0.0291	0.2748	1.2188	1.4936	0.0740	1.1698	1.2438	0.0000	2,748.0643	2,748.0643	0.5150	0.0000	2,760.9402
Maximum	**8.0676**	**27.2870**	**17.4369**	**0.0292**	**6.5220**	**1.6514**	**7.6519**	**3.3806**	**1.5439**	**4.4202**	**0.0000**	**2,772.9695**	**2,772.9695**	**0.6274**	**0.0000**	**2,786.4227**

Mitigated Construction

	ROG	NOx	CO	SO2	Fugitive PM10	Exhaust PM10	PM10 Total	Fugitive PM2.5	Exhaust PM2.5	PM2.5 Total	Bio- CO2	NBio- CO2	Total CO2	CH4	N2O	CO2e
Year	lb/day										lb/day					
2017	3.4446	27.2870	17.4369	0.0292	2.6059	1.6514	3.7358	1.3351	1.5439	2.3747	0.0000	2,772.9695	2,772.9695	0.6274	0.0000	2,786.4227
2018	8.0676	21.2593	16.6833	0.0291	0.2748	1.2188	1.4936	0.0740	1.1698	1.2438	0.0000	2,748.0643	2,748.0643	0.5150	0.0000	2,760.9402
Maximum	**8.0676**	**27.2870**	**17.4369**	**0.0292**	**2.6059**	**1.6514**	**3.7358**	**1.3351**	**1.5439**	**2.3747**	**0.0000**	**2,772.9695**	**2,772.9695**	**0.6274**	**0.0000**	**2,786.4227**

Lakewood Carwash - Los Angeles-South Coast County, Winter

	ROG	NOx	CO	SO2	Fugitive PM10	Exhaust PM10	PM10 Total	Fugitive PM2.5	Exhaust PM2.5	PM2.5 Total	Bio- CO2	NBio-CO2	Total CO2	CH4	N20	CO2e
Percent Reduction	**0.00**	**0.00**	**0.00**	**0.00**	**57.62**	**0.00**	**42.82**	**59.21**	**0.00**	**36.11**	**0.00**	**0.00**	**0.00**	**0.00**	**0.00**	**0.00**

2.2 Overall Operational

Unmitigated Operational

	ROG	NOx	CO	SO2	Fugitive PM10	Exhaust PM10	PM10 Total	Fugitive PM2.5	Exhaust PM2.5	PM2.5 Total	Bio- CO2	NBio- CO2	Total CO2	CH4	N2O	CO2e
Category	lb/day										lb/day					
Area	0.1744	1.0000e-005	8.2000e-004	0.0000		0.0000	0.0000		0.0000	0.0000		1.7400e-003	1.7400e-003	0.0000		1.8600e-003
Energy	2.0900e-003	0.0190	0.0160	1.1000e-004		1.4500e-003	1.4500e-003		1.4500e-003	1.4500e-003		22.8280	22.8280	4.4000e-004	4.2000e-004	22.9637
Mobile	0.6675	3.0721	8.6290	0.0240	1.8392	0.0299	1.8691	0.4923	0.0282	0.5205		2,430.9881	2,430.9881	0.1547		2,434.8562
Total	**0.8439**	**3.0912**	**8.6458**	**0.0241**	**1.8392**	**0.0314**	**1.8706**	**0.4923**	**0.0296**	**0.5219**		**2,453.8179**	**2,453.8179**	**0.1552**	**4.2000e-004**	**2,457.8218**

Mitigated Operational

	ROG	NOx	CO	SO2	Fugitive PM10	Exhaust PM10	PM10 Total	Fugitive PM2.5	Exhaust PM2.5	PM2.5 Total	Bio- CO2	NBio- CO2	Total CO2	CH4	N2O	CO2e
Category	lb/day										lb/day					
Area	0.1744	1.0000e-005	8.2000e-004	0.0000		0.0000	0.0000		0.0000	0.0000		1.7400e-003	1.7400e-003	0.0000		1.8600e-003
Energy	2.0900e-003	0.0190	0.0160	1.1000e-004		1.4500e-003	1.4500e-003		1.4500e-003	1.4500e-003		22.8280	22.8280	4.4000e-004	4.2000e-004	22.9637
Mobile	0.6675	3.0721	8.6290	0.0240	1.8392	0.0299	1.8691	0.4923	0.0282	0.5205		2,430.9881	2,430.9881	0.1547		2,434.8562
Total	**0.8439**	**3.0912**	**8.6458**	**0.0241**	**1.8392**	**0.0314**	**1.8706**	**0.4923**	**0.0296**	**0.5219**		**2,453.8179**	**2,453.8179**	**0.1552**	**4.2000e-004**	**2,457.8218**

	ROG	NOx	CO	SO2	Fugitive PM10	Exhaust PM10	PM10 Total	Fugitive PM2.5	Exhaust PM2.5	PM2.5 Total	Bio- CO2	NBio-CO2	Total CO2	CH4	N20	CO2e
Percent Reduction	**0.00**	**0.00**	**0.00**	**0.00**	**0.00**	**0.00**	**0.00**	**0.00**	**0.00**	**0.00**	**0.00**	**0.00**	**0.00**	**0.00**	**0.00**	**0.00**

3.0 Construction Detail

Construction Phase

Phase Number	Phase Name	Phase Type	Start Date	End Date	Num Days Week	Num Days	Phase Description
1	Demolition	Demolition	8/1/2017	8/28/2017	5	20	
2	Grading	Grading	8/29/2017	9/1/2017	5	4	
3	Building Construction	Building Construction	9/2/2017	1/20/2018	5	100	
4	Paving	Paving	1/21/2018	2/2/2018	5	10	
5	Architectural Coating	Architectural Coating	2/3/2018	2/16/2018	5	10	

Acres of Grading (Site Preparation Phase): 0

Acres of Grading (Grading Phase): 1.5

Acres of Paving: 0.95

Residential Indoor: 0; Residential Outdoor: 0; Non-Residential Indoor: 10,508; Non-Residential Outdoor: 3,503; Striped Parking Area: 2,483 (Architectural Coating – sqft)

OffRoad Equipment

Phase Name	Offroad Equipment Type	Amount	Usage Hours	Horse Power	Load Factor
Demolition	Concrete/Industrial Saws	1	8.00	81	0.73
Demolition	Rubber Tired Dozers	1	8.00	247	0.40
Demolition	Tractors/Loaders/Backhoes	3	8.00	97	0.37
Grading	Graders	1	8.00	187	0.41
Grading	Rubber Tired Dozers	1	8.00	247	0.40
Grading	Tractors/Loaders/Backhoes	1	8.00	97	0.37
Building Construction	Cranes	1	8.00	231	0.29
Building Construction	Forklifts	1	8.00	89	0.20
Building Construction	Generator Sets	1	8.00	84	0.74
Building Construction	Tractors/Loaders/Backhoes	1	8.00	97	0.37
Building Construction	Welders	3	8.00	46	0.45
Paving	Cement and Mortar Mixers	1	8.00	9	0.56
Paving	Pavers	1	8.00	130	0.42
Paving	Paving Equipment	1	8.00	132	0.36
Paving	Rollers	1	8.00	80	0.38
Paving	Tractors/Loaders/Backhoes	1	8.00	97	0.37
Architectural Coating	Air Compressors	1	8.00	78	0.48

Trips and VMT

Phase Name	Offroad Equipment Count	Worker Trip Number	Vendor Trip Number	Hauling Trip Number	Worker Trip Length	Vendor Trip Length	Hauling Trip Length	Worker Vehicle Class	Vendor Vehicle Class	Hauling Vehicle Class
Demolition	5	13.00	0.00	26.00	14.70	6.90	20.00	LD_Mix	HDT_Mix	HHDT
Grading	3	8.00	2.00	0.00	14.70	6.90	20.00	LD_Mix	HDT_Mix	HHDT
Building Construction	7	20.00	8.00	0.00	14.70	6.90	20.00	LD_Mix	HDT_Mix	HHDT
Paving	5	13.00	2.00	0.00	14.70	6.90	20.00	LD_Mix	HDT_Mix	HHDT
Architectural Coating	1	4.00	0.00	0.00	14.70	6.90	20.00	LD_Mix	HDT_Mix	HHDT

3.1 Mitigation Measures Construction

Water Exposed Area

3.2 Demolition - 2017

Unmitigated Construction On-Site

	ROG	NOx	CO	SO2	Fugitive PM10	Exhaust PM10	PM10 Total	Fugitive PM2.5	Exhaust PM2.5	PM2.5 Total	Bio- CO2	NBio- CO2	Total CO2	CH4	N2O	CO2e
Category	lb/day										lb/day					
Fugitive Dust					0.2815	0.0000	0.2815	0.0426	0.0000	0.0426			0.0000			0.0000
Off-Road	2.7625	26.7594	15.5573	0.0241		1.6477	1.6477		1.5404	1.5404		2,421.4229	2,421.4229	0.6125		2,436.7347
Total	**2.7625**	**26.7594**	**15.5573**	**0.0241**	**0.2815**	**1.6477**	**1.9292**	**0.0426**	**1.5404**	**1.5830**		**2,421.4229**	**2,421.4229**	**0.6125**		**2,436.7347**

3.2 Demolition - 2017

Unmitigated Construction Off-Site

	ROG	NOx	CO	SO2	Fugitive PM10	Exhaust PM10	PM10 Total	Fugitive PM2.5	Exhaust PM2.5	PM2.5 Total	Bio- CO2	NBio- CO2	Total CO2	CH4	N2O	CO2e
Category	lb/day										lb/day					
Hauling	0.0150	0.4585	0.0988	1.0500e-003	0.0227	2.4200e-003	0.0252	6.2300e-003	2.3200e-003	8.5500e-003		112.9094	112.9094	8.3400e-003		113.1178
Vendor	0.0000	0.0000	0.0000	0.0000	0.0000	0.0000	0.0000	0.0000	0.0000	0.0000		0.0000	0.0000	0.0000		0.0000
Worker	0.0899	0.0691	0.7409	1.5900e-003	0.1453	1.3500e-003	0.1467	0.0385	1.2500e-003	0.0398		157.8087	157.8087	6.5900e-003		157.9735
Total	**0.1049**	**0.5276**	**0.8397**	**2.6400e-003**	**0.1680**	**3.7700e-003**	**0.1718**	**0.0448**	**3.5700e-003**	**0.0483**		**270.7180**	**270.7180**	**0.0149**		**271.0914**

Mitigated Construction On-Site

	ROG	NOx	CO	SO2	Fugitive PM10	Exhaust PM10	PM10 Total	Fugitive PM2.5	Exhaust PM2.5	PM2.5 Total	Bio- CO2	NBio- CO2	Total CO2	CH4	N2O	CO2e
Category	lb/day										lb/day					
Fugitive Dust					0.1098	0.0000	0.1098	0.0166	0.0000	0.0166			0.0000			0.0000
Off-Road	2.7625	26.7594	15.5573	0.0241		1.6477	1.6477		1.5404	1.5404	0.0000	2,421.4229	2,421.4229	0.6125		2,436.7347
Total	**2.7625**	**26.7594**	**15.5573**	**0.0241**	**0.1098**	**1.6477**	**1.7574**	**0.0166**	**1.5404**	**1.5570**	**0.0000**	**2,421.4229**	**2,421.4229**	**0.6125**		**2,436.7347**

3.2 Demolition - 2017

Mitigated Construction Off-Site

	ROG	NOx	CO	SO2	Fugitive PM10	Exhaust PM10	PM10 Total	Fugitive PM2.5	Exhaust PM2.5	PM2.5 Total	Bio- CO2	NBio- CO2	Total CO2	CH4	N2O	CO2e
Category	lb/day										lb/day					
Hauling	0.0150	0.4585	0.0988	1.0500e-003	0.0227	2.4200e-003	0.0252	6.2300e-003	2.3200e-003	8.5500e-003		112.9094	112.9094	8.3400e-003		113.1178
Vendor	0.0000	0.0000	0.0000	0.0000	0.0000	0.0000	0.0000	0.0000	0.0000	0.0000		0.0000	0.0000	0.0000		0.0000
Worker	0.0899	0.0691	0.7409	1.5900e-003	0.1453	1.3500e-003	0.1467	0.0385	1.2500e-003	0.0398		157.8087	157.8087	6.5900e-003		157.9735
Total	**0.1049**	**0.5276**	**0.8397**	**2.6400e-003**	**0.1680**	**3.7700e-003**	**0.1718**	**0.0448**	**3.5700e-003**	**0.0483**		**270.7180**	**270.7180**	**0.0149**		**271.0914**

3.3 Grading - 2017

Unmitigated Construction On-Site

	ROG	NOx	CO	SO2	Fugitive PM10	Exhaust PM10	PM10 Total	Fugitive PM2.5	Exhaust PM2.5	PM2.5 Total	Bio- CO2	NBio- CO2	Total CO2	CH4	N2O	CO2e
Category	lb/day										lb/day					
Fugitive Dust					6.4198	0.0000	6.4198	3.3532	0.0000	3.3532			0.0000			0.0000
Off-Road	2.0836	23.8814	8.9800	0.0183		1.1269	1.1269		1.0367	1.0367		1,873.4835	1,873.4835	0.5740		1,887.8343
Total	**2.0836**	**23.8814**	**8.9800**	**0.0183**	**6.4198**	**1.1269**	**7.5466**	**3.3532**	**1.0367**	**4.3899**		**1,873.4835**	**1,873.4835**	**0.5740**		**1,887.8343**

3.3 Grading - 2017

Unmitigated Construction Off-Site

	ROG	NOx	CO	SO2	Fugitive PM10	Exhaust PM10	PM10 Total	Fugitive PM2.5	Exhaust PM2.5	PM2.5 Total	Bio- CO2	NBio- CO2	Total CO2	CH4	N2O	CO2e
Category	lb/day										lb/day					
Hauling	0.0000	0.0000	0.0000	0.0000	0.0000	0.0000	0.0000	0.0000	0.0000	0.0000		0.0000	0.0000	0.0000		0.0000
Vendor	0.0109	0.2617	0.0813	5.2000e-004	0.0128	2.2200e-003	0.0150	3.6900e-003	2.1200e-003	5.8100e-003		55.0477	55.0477	4.1700e-003		55.1518
Worker	0.0553	0.0425	0.4559	9.8000e-004	0.0894	8.3000e-004	0.0903	0.0237	7.7000e-004	0.0245		97.1130	97.1130	4.0600e-003		97.2145
Total	**0.0662**	**0.3042**	**0.5373**	**1.5000e-003**	**0.1022**	**3.0500e-003**	**0.1053**	**0.0274**	**2.8900e-003**	**0.0303**		**152.1607**	**152.1607**	**8.2300e-003**		**152.3663**

Mitigated Construction On-Site

	ROG	NOx	CO	SO2	Fugitive PM10	Exhaust PM10	PM10 Total	Fugitive PM2.5	Exhaust PM2.5	PM2.5 Total	Bio- CO2	NBio- CO2	Total CO2	CH4	N2O	CO2e
Category	lb/day										lb/day					
Fugitive Dust					2.5037	0.0000	2.5037	1.3077	0.0000	1.3077			0.0000			0.0000
Off-Road	2.0836	23.8814	8.9800	0.0183		1.1269	1.1269		1.0367	1.0367	0.0000	1,873.4835	1,873.4835	0.5740		1,887.8343
Total	**2.0836**	**23.8814**	**8.9800**	**0.0183**	**2.5037**	**1.1269**	**3.6306**	**1.3077**	**1.0367**	**2.3444**	**0.0000**	**1,873.4835**	**1,873.4835**	**0.5740**		**1,887.8343**

3.3 Grading - 2017

Mitigated Construction Off-Site

	ROG	NOx	CO	SO2	Fugitive PM10	Exhaust PM10	PM10 Total	Fugitive PM2.5	Exhaust PM2.5	PM2.5 Total	Bio- CO2	NBio- CO2	Total CO2	CH4	N2O	CO2e
Category	lb/day										lb/day					
Hauling	0.0000	0.0000	0.0000	0.0000	0.0000	0.0000	0.0000	0.0000	0.0000	0.0000		0.0000	0.0000	0.0000		0.0000
Vendor	0.0109	0.2617	0.0813	5.2000e-004	0.0128	2.2200e-003	0.0150	3.6900e-003	2.1200e-003	5.8100e-003		55.0477	55.0477	4.1700e-003		55.1518
Worker	0.0553	0.0425	0.4559	9.8000e-004	0.0894	8.3000e-004	0.0903	0.0237	7.7000e-004	0.0245		97.1130	97.1130	4.0600e-003		97.2145
Total	**0.0662**	**0.3042**	**0.5373**	**1.5000e-003**	**0.1022**	**3.0500e-003**	**0.1053**	**0.0274**	**2.8900e-003**	**0.0303**		**152.1607**	**152.1607**	**8.2300e-003**		**152.3663**

3.4 Building Construction - 2017

Unmitigated Construction On-Site

	ROG	NOx	CO	SO2	Fugitive PM10	Exhaust PM10	PM10 Total	Fugitive PM2.5	Exhaust PM2.5	PM2.5 Total	Bio- CO2	NBio- CO2	Total CO2	CH4	N2O	CO2e
Category	lb/day										lb/day					
Off-Road	3.2628	22.4198	15.9718	0.0246		1.4139	1.4139		1.3555	1.3555		2,309.9962	2,309.9962	0.5113		2,322.7791
Total	**3.2628**	**22.4198**	**15.9718**	**0.0246**		**1.4139**	**1.4139**		**1.3555**	**1.3555**		**2,309.9962**	**2,309.9962**	**0.5113**		**2,322.7791**

3.4 Building Construction - 2017

Unmitigated Construction Off-Site

	ROG	NOx	CO	SO2	Fugitive PM10	Exhaust PM10	PM10 Total	Fugitive PM2.5	Exhaust PM2.5	PM2.5 Total	Bio- CO2	NBio- CO2	Total CO2	CH4	N2O	CO2e
Category	lb/day										lb/day					
Hauling	0.0000	0.0000	0.0000	0.0000	0.0000	0.0000	0.0000	0.0000	0.0000	0.0000		0.0000	0.0000	0.0000		0.0000
Vendor	0.0435	1.0467	0.3253	2.0700e-003	0.0512	8.8700e-003	0.0601	0.0147	8.4900e-003	0.0232		220.1907	220.1907	0.0167		220.6073
Worker	0.1383	0.1062	1.1398	2.4400e-003	0.2236	2.0800e-003	0.2256	0.0593	1.9200e-003	0.0612		242.7826	242.7826	0.0102		243.0362
Total	**0.1818**	**1.1530**	**1.4651**	**4.5100e-003**	**0.2748**	**0.0110**	**0.2857**	**0.0740**	**0.0104**	**0.0844**		**462.9733**	**462.9733**	**0.0268**		**463.6435**

Mitigated Construction On-Site

	ROG	NOx	CO	SO2	Fugitive PM10	Exhaust PM10	PM10 Total	Fugitive PM2.5	Exhaust PM2.5	PM2.5 Total	Bio- CO2	NBio- CO2	Total CO2	CH4	N2O	CO2e
Category	lb/day										lb/day					
Off-Road	3.2628	22.4198	15.9718	0.0246		1.4139	1.4139		1.3555	1.3555	0.0000	2,309.9962	2,309.9962	0.5113		2,322.7791
Total	**3.2628**	**22.4198**	**15.9718**	**0.0246**		**1.4139**	**1.4139**		**1.3555**	**1.3555**	**0.0000**	**2,309.9962**	**2,309.9962**	**0.5113**		**2,322.7791**

3.4 Building Construction - 2017

Mitigated Construction Off-Site

	ROG	NOx	CO	SO2	Fugitive PM10	Exhaust PM10	PM10 Total	Fugitive PM2.5	Exhaust PM2.5	PM2.5 Total	Bio- CO2	NBio- CO2	Total CO2	CH4	N2O	CO2e
Category	lb/day										lb/day					
Hauling	0.0000	0.0000	0.0000	0.0000	0.0000	0.0000	0.0000	0.0000	0.0000	0.0000		0.0000	0.0000	0.0000		0.0000
Vendor	0.0435	1.0467	0.3253	2.0700e-003	0.0512	8.8700e-003	0.0601	0.0147	8.4900e-003	0.0232		220.1907	220.1907	0.0167		220.6073
Worker	0.1383	0.1062	1.1398	2.4400e-003	0.2236	2.0800e-003	0.2256	0.0593	1.9200e-003	0.0612		242.7826	242.7826	0.0102		243.0362
Total	**0.1818**	**1.1530**	**1.4651**	**4.5100e-003**	**0.2748**	**0.0110**	**0.2857**	**0.0740**	**0.0104**	**0.0844**		**462.9733**	**462.9733**	**0.0268**		**463.6435**

3.4 Building Construction - 2018

Unmitigated Construction On-Site

	ROG	NOx	CO	SO2	Fugitive PM10	Exhaust PM10	PM10 Total	Fugitive PM2.5	Exhaust PM2.5	PM2.5 Total	Bio- CO2	NBio- CO2	Total CO2	CH4	N2O	CO2e
Category	lb/day										lb/day					
Off-Road	2.8456	20.1842	15.3941	0.0246		1.2098	1.2098		1.1612	1.1612		2,292.6292	2,292.6292	0.4903		2,304.8874
Total	**2.8456**	**20.1842**	**15.3941**	**0.0246**		**1.2098**	**1.2098**		**1.1612**	**1.1612**		**2,292.6292**	**2,292.6292**	**0.4903**		**2,304.8874**

3.4 Building Construction - 2018

Unmitigated Construction Off-Site

	ROG	NOx	CO	SO2	Fugitive PM10	Exhaust PM10	PM10 Total	Fugitive PM2.5	Exhaust PM2.5	PM2.5 Total	Bio- CO2	NBio- CO2	Total CO2	CH4	N2O	CO2e
Category	lb/day										lb/day					
Hauling	0.0000	0.0000	0.0000	0.0000	0.0000	0.0000	0.0000	0.0000	0.0000	0.0000		0.0000	0.0000	0.0000		0.0000
Vendor	0.0384	0.9827	0.2947	2.0600e-003	0.0512	7.0200e-003	0.0582	0.0148	6.7200e-003	0.0215		219.3199	219.3199	0.0158		219.7155
Worker	0.1223	0.0923	0.9945	2.3700e-003	0.2236	1.9900e-003	0.2256	0.0593	1.8400e-003	0.0611		236.1152	236.1152	8.8900e-003		236.3373
Total	**0.1607**	**1.0750**	**1.2892**	**4.4300e-003**	**0.2748**	**9.0100e-003**	**0.2838**	**0.0740**	**8.5600e-003**	**0.0826**		**455.4351**	**455.4351**	**0.0247**		**456.0528**

Mitigated Construction On-Site

	ROG	NOx	CO	SO2	Fugitive PM10	Exhaust PM10	PM10 Total	Fugitive PM2.5	Exhaust PM2.5	PM2.5 Total	Bio- CO2	NBio- CO2	Total CO2	CH4	N2O	CO2e
Category	lb/day										lb/day					
Off-Road	2.8456	20.1842	15.3941	0.0246		1.2098	1.2098		1.1612	1.1612	0.0000	2,292.6292	2,292.6292	0.4903		2,304.8874
Total	**2.8456**	**20.1842**	**15.3941**	**0.0246**		**1.2098**	**1.2098**		**1.1612**	**1.1612**	**0.0000**	**2,292.6292**	**2,292.6292**	**0.4903**		**2,304.8874**

3.4 Building Construction - 2018

Mitigated Construction Off-Site

	ROG	NOx	CO	SO2	Fugitive PM10	Exhaust PM10	PM10 Total	Fugitive PM2.5	Exhaust PM2.5	PM2.5 Total	Bio- CO2	NBio- CO2	Total CO2	CH4	N2O	CO2e
Category	lb/day										lb/day					
Hauling	0.0000	0.0000	0.0000	0.0000	0.0000	0.0000	0.0000	0.0000	0.0000	0.0000		0.0000	0.0000	0.0000		0.0000
Vendor	0.0384	0.9827	0.2947	2.0600e-003	0.0512	7.0200e-003	0.0582	0.0148	6.7200e-003	0.0215		219.3199	219.3199	0.0158		219.7155
Worker	0.1223	0.0923	0.9945	2.3700e-003	0.2236	1.9900e-003	0.2256	0.0593	1.8400e-003	0.0611		236.1152	236.1152	8.8900e-003		236.3373
Total	**0.1607**	**1.0750**	**1.2892**	**4.4300e-003**	**0.2748**	**9.0100e-003**	**0.2838**	**0.0740**	**8.5600e-003**	**0.0826**		**455.4351**	**455.4351**	**0.0247**		**456.0528**

3.5 Paving - 2018

Unmitigated Construction On-Site

	ROG	NOx	CO	SO2	Fugitive PM10	Exhaust PM10	PM10 Total	Fugitive PM2.5	Exhaust PM2.5	PM2.5 Total	Bio- CO2	NBio- CO2	Total CO2	CH4	N2O	CO2e
Category	lb/day										lb/day					
Off-Road	1.1467	11.7584	10.0433	0.0152		0.6789	0.6789		0.6257	0.6257		1,510.3366	1,510.3366	0.4597		1,521.8293
Paving	0.2489					0.0000	0.0000		0.0000	0.0000			0.0000			0.0000
Total	**1.3956**	**11.7584**	**10.0433**	**0.0152**		**0.6789**	**0.6789**		**0.6257**	**0.6257**		**1,510.3366**	**1,510.3366**	**0.4597**		**1,521.8293**

3.5 Paving - 2018

Unmitigated Construction Off-Site

	ROG	NOx	CO	SO2	Fugitive PM10	Exhaust PM10	PM10 Total	Fugitive PM2.5	Exhaust PM2.5	PM2.5 Total	Bio- CO2	NBio- CO2	Total CO2	CH4	N2O	CO2e
Category	lb/day										lb/day					
Hauling	0.0000	0.0000	0.0000	0.0000	0.0000	0.0000	0.0000	0.0000	0.0000	0.0000		0.0000	0.0000	0.0000		0.0000
Vendor	9.5900e-003	0.2457	0.0737	5.1000e-004	0.0128	1.7500e-003	0.0146	3.6900e-003	1.6800e-003	5.3700e-003		54.8300	54.8300	3.9600e-003		54.9289
Worker	0.0795	0.0600	0.6465	1.5400e-003	0.1453	1.3000e-003	0.1466	0.0385	1.1900e-003	0.0397		153.4749	153.4749	5.7800e-003		153.6193
Total	**0.0891**	**0.3057**	**0.7201**	**2.0500e-003**	**0.1581**	**3.0500e-003**	**0.1612**	**0.0422**	**2.8700e-003**	**0.0451**		**208.3049**	**208.3049**	**9.7400e-003**		**208.5481**

Mitigated Construction On-Site

	ROG	NOx	CO	SO2	Fugitive PM10	Exhaust PM10	PM10 Total	Fugitive PM2.5	Exhaust PM2.5	PM2.5 Total	Bio- CO2	NBio- CO2	Total CO2	CH4	N2O	CO2e
Category	lb/day										lb/day					
Off-Road	1.1467	11.7584	10.0433	0.0152		0.6789	0.6789		0.6257	0.6257	0.0000	1,510.3366	1,510.3366	0.4597		1,521.8293
Paving	0.2489					0.0000	0.0000		0.0000	0.0000			0.0000			0.0000
Total	**1.3956**	**11.7584**	**10.0433**	**0.0152**		**0.6789**	**0.6789**		**0.6257**	**0.6257**	**0.0000**	**1,510.3366**	**1,510.3366**	**0.4597**		**1,521.8293**

3.5 Paving - 2018

Mitigated Construction Off-Site

	ROG	NOx	CO	SO2	Fugitive PM10	Exhaust PM10	PM10 Total	Fugitive PM2.5	Exhaust PM2.5	PM2.5 Total	Bio- CO2	NBio- CO2	Total CO2	CH4	N2O	CO2e
Category	lb/day										lb/day					
Hauling	0.0000	0.0000	0.0000	0.0000	0.0000	0.0000	0.0000	0.0000	0.0000	0.0000		0.0000	0.0000	0.0000		0.0000
Vendor	9.5900e-003	0.2457	0.0737	5.1000e-004	0.0128	1.7500e-003	0.0146	3.6900e-003	1.6800e-003	5.3700e-003		54.8300	54.8300	3.9600e-003		54.9289
Worker	0.0795	0.0600	0.6465	1.5400e-003	0.1453	1.3000e-003	0.1466	0.0385	1.1900e-003	0.0397		153.4749	153.4749	5.7800e-003		153.6193
Total	**0.0891**	**0.3057**	**0.7201**	**2.0500e-003**	**0.1581**	**3.0500e-003**	**0.1612**	**0.0422**	**2.8700e-003**	**0.0451**		**208.3049**	**208.3049**	**9.7400e-003**		**208.5481**

3.6 Architectural Coating - 2018

Unmitigated Construction On-Site

	ROG	NOx	CO	SO2	Fugitive PM10	Exhaust PM10	PM10 Total	Fugitive PM2.5	Exhaust PM2.5	PM2.5 Total	Bio- CO2	NBio- CO2	Total CO2	CH4	N2O	CO2e
Category	lb/day										lb/day					
Archit. Coating	7.6450					0.0000	0.0000		0.0000	0.0000			0.0000			0.0000
Off-Road	0.3982	2.6743	2.4723	3.9600e-003		0.2007	0.2007		0.2007	0.2007		375.2647	375.2647	0.0357		376.1562
Total	**8.0432**	**2.6743**	**2.4723**	**3.9600e-003**		**0.2007**	**0.2007**		**0.2007**	**0.2007**		**375.2647**	**375.2647**	**0.0357**		**376.1562**

3.6 Architectural Coating - 2018

Unmitigated Construction Off-Site

	ROG	NOx	CO	SO2	Fugitive PM10	Exhaust PM10	PM10 Total	Fugitive PM2.5	Exhaust PM2.5	PM2.5 Total	Bio- CO2	NBio- CO2	Total CO2	CH4	N2O	CO2e
Category	lb/day										lb/day					
Hauling	0.0000	0.0000	0.0000	0.0000	0.0000	0.0000	0.0000	0.0000	0.0000	0.0000		0.0000	0.0000	0.0000		0.0000
Vendor	0.0000	0.0000	0.0000	0.0000	0.0000	0.0000	0.0000	0.0000	0.0000	0.0000		0.0000	0.0000	0.0000		0.0000
Worker	0.0245	0.0185	0.1989	4.7000e-004	0.0447	4.0000e-004	0.0451	0.0119	3.7000e-004	0.0122		47.2230	47.2230	1.7800e-003		47.2675
Total	**0.0245**	**0.0185**	**0.1989**	**4.7000e-004**	**0.0447**	**4.0000e-004**	**0.0451**	**0.0119**	**3.7000e-004**	**0.0122**		**47.2230**	**47.2230**	**1.7800e-003**		**47.2675**

Mitigated Construction On-Site

	ROG	NOx	CO	SO2	Fugitive PM10	Exhaust PM10	PM10 Total	Fugitive PM2.5	Exhaust PM2.5	PM2.5 Total	Bio- CO2	NBio- CO2	Total CO2	CH4	N2O	CO2e
Category	lb/day										lb/day					
Archit. Coating	7.6450					0.0000	0.0000		0.0000	0.0000			0.0000			0.0000
Off-Road	0.3982	2.6743	2.4723	3.9600e-003		0.2007	0.2007		0.2007	0.2007	0.0000	375.2647	375.2647	0.0357		376.1562
Total	**8.0432**	**2.6743**	**2.4723**	**3.9600e-003**		**0.2007**	**0.2007**		**0.2007**	**0.2007**	**0.0000**	**375.2647**	**375.2647**	**0.0357**		**376.1562**

3.6 Architectural Coating - 2018

Mitigated Construction Off-Site

	ROG	NOx	CO	SO2	Fugitive PM10	Exhaust PM10	PM10 Total	Fugitive PM2.5	Exhaust PM2.5	PM2.5 Total	Bio- CO2	NBio- CO2	Total CO2	CH4	N2O	CO2e
Category	lb/day										lb/day					
Hauling	0.0000	0.0000	0.0000	0.0000	0.0000	0.0000	0.0000	0.0000	0.0000	0.0000		0.0000	0.0000	0.0000		0.0000
Vendor	0.0000	0.0000	0.0000	0.0000	0.0000	0.0000	0.0000	0.0000	0.0000	0.0000		0.0000	0.0000	0.0000		0.0000
Worker	0.0245	0.0185	0.1989	4.7000e-004	0.0447	4.0000e-004	0.0451	0.0119	3.7000e-004	0.0122		47.2230	47.2230	1.7800e-003		47.2675
Total	**0.0245**	**0.0185**	**0.1989**	**4.7000e-004**	**0.0447**	**4.0000e-004**	**0.0451**	**0.0119**	**3.7000e-004**	**0.0122**		**47.2230**	**47.2230**	**1.7800e-003**		**47.2675**

4.0 Operational Detail - Mobile

4.1 Mitigation Measures Mobile

	ROG	NOx	CO	SO2	Fugitive PM10	Exhaust PM10	PM10 Total	Fugitive PM2.5	Exhaust PM2.5	PM2.5 Total	Bio- CO2	NBio- CO2	Total CO2	CH4	N2O	CO2e
Category	lb/day										lb/day					
Mitigated	0.6675	3.0721	8.6290	0.0240	1.8392	0.0299	1.8691	0.4923	0.0282	0.5205		2,430.9881	2,430.9881	0.1547		2,434.8562
Unmitigated	0.6675	3.0721	8.6290	0.0240	1.8392	0.0299	1.8691	0.4923	0.0282	0.5205		2,430.9881	2,430.9881	0.1547		2,434.8562

4.2 Trip Summary Information

	Average Daily Trip Rate			Unmitigated	Mitigated
Land Use	Weekday	Saturday	Sunday	Annual VMT	Annual VMT
Automobile Care Center	282.83	268.91	141.41	796,924	796,924
Other Asphalt Surfaces	0.00	0.00	0.00		
User Defined Retail	0.00	0.00	0.00		
Total	282.83	268.91	141.41	796,924	796,924

4.3 Trip Type Information

	Miles			Trip %			Trip Purpose %		
Land Use	H-W or C-W	H-S or C-C	H-O or C-NW	H-W or C-W	H-S or C-C	H-O or C-NW	Primary	Diverted	Pass-by
Automobile Care Center	16.60	8.40	6.90	0.00	100.00	0.00	100	0	0
Other Asphalt Surfaces	16.60	8.40	6.90	0.00	0.00	0.00	0	0	0
User Defined Retail	16.60	8.40	6.90	0.00	0.00	0.00	0	0	0

4.4 Fleet Mix

Land Use	LDA	LDT1	LDT2	MDV	LHD1	LHD2	MHD	HHD	OBUS	UBUS	MCY	SBUS	MH
Other Asphalt Surfaces	0.547972	0.046127	0.199330	0.125604	0.017697	0.005953	0.018360	0.027618	0.002341	0.002583	0.004804	0.000667	0.000944
Automobile Care Center	0.547972	0.046127	0.199330	0.125604	0.017697	0.005953	0.018360	0.027618	0.002341	0.002583	0.004804	0.000667	0.000944
User Defined Retail	0.547972	0.046127	0.199330	0.125604	0.017697	0.005953	0.018360	0.027618	0.002341	0.002583	0.004804	0.000667	0.000944

5.0 Energy Detail

Historical Energy Use: N

5.1 Mitigation Measures Energy

	ROG	NOx	CO	SO2	Fugitive PM10	Exhaust PM10	PM10 Total	Fugitive PM2.5	Exhaust PM2.5	PM2.5 Total	Bio- CO2	NBio- CO2	Total CO2	CH4	N2O	CO2e
Category	lb/day										lb/day					
NaturalGas Mitigated	2.0900e-003	0.0190	0.0160	1.1000e-004		1.4500e-003	1.4500e-003		1.4500e-003	1.4500e-003		22.8280	22.8280	4.4000e-004	4.2000e-004	22.9637
NaturalGas Unmitigated	2.0900e-003	0.0190	0.0160	1.1000e-004		1.4500e-003	1.4500e-003		1.4500e-003	1.4500e-003		22.8280	22.8280	4.4000e-004	4.2000e-004	22.9637

5.2 Energy by Land Use - NaturalGas

Unmitigated

	NaturalGas Use	ROG	NOx	CO	SO2	Fugitive PM10	Exhaust PM10	PM10 Total	Fugitive PM2.5	Exhaust PM2.5	PM2.5 Total	Bio- CO2	NBio- CO2	Total CO2	CH4	N2O	CO2e
Land Use	kBTU/yr	lb/day										lb/day					
Automobile Care Center	194.038	2.0900e-003	0.0190	0.0160	1.1000e-004		1.4500e-003	1.4500e-003		1.4500e-003	1.4500e-003		22.8280	22.8280	4.4000e-004	4.2000e-004	22.9637
Other Asphalt Surfaces	0	0.0000	0.0000	0.0000	0.0000		0.0000	0.0000		0.0000	0.0000		0.0000	0.0000	0.0000	0.0000	0.0000
User Defined Retail	0	0.0000	0.0000	0.0000	0.0000		0.0000	0.0000		0.0000	0.0000		0.0000	0.0000	0.0000	0.0000	0.0000
Total		**2.0900e-003**	**0.0190**	**0.0160**	**1.1000e-004**		**1.4500e-003**	**1.4500e-003**		**1.4500e-003**	**1.4500e-003**		**22.8280**	**22.8280**	**4.4000e-004**	**4.2000e-004**	**22.9637**

Mitigated

	NaturalGas Use	ROG	NOx	CO	SO2	Fugitive PM10	Exhaust PM10	PM10 Total	Fugitive PM2.5	Exhaust PM2.5	PM2.5 Total	Bio- CO2	NBio- CO2	Total CO2	CH4	N2O	CO2e
Land Use	kBTU/yr	lb/day										lb/day					
Automobile Care Center	0.194038	2.0900e-003	0.0190	0.0160	1.1000e-004		1.4500e-003	1.4500e-003		1.4500e-003	1.4500e-003		22.8280	22.8280	4.4000e-004	4.2000e-004	22.9637
Other Asphalt Surfaces	0	0.0000	0.0000	0.0000	0.0000		0.0000	0.0000		0.0000	0.0000		0.0000	0.0000	0.0000	0.0000	0.0000
User Defined Retail	0	0.0000	0.0000	0.0000	0.0000		0.0000	0.0000		0.0000	0.0000		0.0000	0.0000	0.0000	0.0000	0.0000
Total		**2.0900e-003**	**0.0190**	**0.0160**	**1.1000e-004**		**1.4500e-003**	**1.4500e-003**		**1.4500e-003**	**1.4500e-003**		**22.8280**	**22.8280**	**4.4000e-004**	**4.2000e-004**	**22.9637**

6.0 Area Detail

6.1 Mitigation Measures Area

	ROG	NOx	CO	SO2	Fugitive PM10	Exhaust PM10	PM10 Total	Fugitive PM2.5	Exhaust PM2.5	PM2.5 Total	Bio- CO2	NBio- CO2	Total CO2	CH4	N2O	CO2e
Category	lb/day										lb/day					
Mitigated	0.1744	1.0000e-005	8.2000e-004	0.0000		0.0000	0.0000		0.0000	0.0000		1.7400e-003	1.7400e-003	0.0000		1.8600e-003
Unmitigated	0.1744	1.0000e-005	8.2000e-004	0.0000		0.0000	0.0000		0.0000	0.0000		1.7400e-003	1.7400e-003	0.0000		1.8600e-003

6.2 Area by SubCategory

Unmitigated

	ROG	NOx	CO	SO2	Fugitive PM10	Exhaust PM10	PM10 Total	Fugitive PM2.5	Exhaust PM2.5	PM2.5 Total	Bio- CO2	NBio- CO2	Total CO2	CH4	N2O	CO2e
SubCategory	lb/day										lb/day					
Architectural Coating	0.0210					0.0000	0.0000		0.0000	0.0000			0.0000			0.0000
Consumer Products	0.1534					0.0000	0.0000		0.0000	0.0000			0.0000			0.0000
Landscaping	8.0000e-005	1.0000e-005	8.2000e-004	0.0000		0.0000	0.0000		0.0000	0.0000		1.7400e-003	1.7400e-003	0.0000		1.8600e-003
Total	**0.1744**	**1.0000e-005**	**8.2000e-004**	**0.0000**		**0.0000**	**0.0000**		**0.0000**	**0.0000**		**1.7400e-003**	**1.7400e-003**	**0.0000**		**1.8600e-003**

6.2 Area by SubCategory

Mitigated

	ROG	NOx	CO	SO2	Fugitive PM10	Exhaust PM10	PM10 Total	Fugitive PM2.5	Exhaust PM2.5	PM2.5 Total	Bio- CO2	NBio- CO2	Total CO2	CH4	N2O	CO2e
SubCategory	lb/day										lb/day					
Architectural Coating	0.0210					0.0000	0.0000		0.0000	0.0000			0.0000			0.0000
Consumer Products	0.1534					0.0000	0.0000		0.0000	0.0000			0.0000			0.0000
Landscaping	8.0000e-005	1.0000e-005	8.2000e-004	0.0000		0.0000	0.0000		0.0000	0.0000		1.7400e-003	1.7400e-003	0.0000		1.8600e-003
Total	**0.1744**	**1.0000e-005**	**8.2000e-004**	**0.0000**		**0.0000**	**0.0000**		**0.0000**	**0.0000**		**1.7400e-003**	**1.7400e-003**	**0.0000**		**1.8600e-003**

7.0 Water Detail

7.1 Mitigation Measures Water

Apply Water Conservation Strategy

8.0 Waste Detail

8.1 Mitigation Measures Waste

Institute Recycling and Composting Services

9.0 Operational Offroad

Equipment Type	Number	Hours/Day	Days/Year	Horse Power	Load Factor	Fuel Type

10.0 Stationary Equipment

Fire Pumps and Emergency Generators

Equipment Type	Number	Hours/Day	Hours/Year	Horse Power	Load Factor	Fuel Type

Boilers

Equipment Type	Number	Heat Input/Day	Heat Input/Year	Boiler Rating	Fuel Type

User Defined Equipment

Equipment Type	Number

11.0 Vegetation

Lakewood Carwash

Los Angeles-South Coast County, Annual

1.0 Project Characteristics

1.1 Land Usage

Land Uses	Size	Metric	Lot Acreage	Floor Surface Area	Population
Other Asphalt Surfaces	0.95	Acre	0.95	41,382.00	0
Automobile Care Center	3.90	1000sqft	0.09	3,900.00	0
User Defined Retail	3.10	User Defined Unit	0.07	3,105.00	0

1.2 Other Project Characteristics

Urbanization	Urban	**Wind Speed (m/s)**	2.2	**Precipitation Freq (Days)**	33
Climate Zone	9			**Operational Year**	2018
Utility Company	Southern California Edison				
CO2 Intensity (lb/MWhr)	702.44	**CH4 Intensity (lb/MWhr)**	0.029	**N2O Intensity (lb/MWhr)**	0.006

1.3 User Entered Comments & Non-Default Data

Project Characteristics - Project description

Land Use - Project description

Construction Phase - see Project assumptions

Off-road Equipment - Equipment assumed to operate 8 hr/day

Off-road Equipment - Equipment assumed to operate 8 hr/day

Off-road Equipment -

Off-road Equipment - Equipment assumed to operate 8 hr/day

Off-road Equipment - Equipment assumed to operate 8 hr/day

Trips and VMT - Added water truck trips

Demolition - Per project description

Vehicle Trips - trip rate based on trip generation survey data; 100% of trips assumed primary and C-C

Energy Use - See Project assumptions

Water And Wastewater - Per Project Description

Solid Waste - Per CalEEMod rate for gas/service station (3.82 ton/size/yr)

Land Use Change -

Sequestration - per Site Plan

Construction Off-road Equipment Mitigation - Water 3x daily per Rule 403

Water Mitigation - Per CalGreen

Waste Mitigation - Per Calrecycle website - Lakewood diversion rate 2006

Table Name	Column Name	Default Value	New Value
tblConstDustMitigation	WaterUnpavedRoadVehicleSpeed	40	0
tblConstructionPhase	NumDays	200.00	100.00
tblConstructionPhase	PhaseEndDate	1/19/2018	1/20/2018
tblConstructionPhase	PhaseStartDate	1/20/2018	1/21/2018
tblEnergyUse	T24E	0.00	47.63
tblGrading	AcresOfGrading	2.00	1.50

tblLandUse	BuildingSpaceSquareFeet	0.00	3,105.00
tblLandUse	LandUseSquareFeet	0.00	3,105.00
tblLandUse	LotAcreage	0.00	0.07
tblOffRoadEquipment	UsageHours	6.00	8.00
tblOffRoadEquipment	UsageHours	6.00	8.00
tblOffRoadEquipment	UsageHours	6.00	8.00
tblOffRoadEquipment	UsageHours	6.00	8.00
tblOffRoadEquipment	UsageHours	6.00	8.00
tblOffRoadEquipment	UsageHours	6.00	8.00
tblOffRoadEquipment	UsageHours	7.00	8.00
tblOffRoadEquipment	UsageHours	6.00	8.00
tblOffRoadEquipment	UsageHours	6.00	8.00
tblOffRoadEquipment	UsageHours	7.00	8.00
tblSequestration	NumberOfNewTrees	0.00	31.00
tblSolidWaste	SolidWasteGenerationRate	0.00	11.86
tblTripsAndVMT	VendorTripNumber	0.00	2.00
tblTripsAndVMT	VendorTripNumber	0.00	2.00
tblVehicleTrips	CC_TTP	48.00	100.00
tblVehicleTrips	CNW_TTP	19.00	0.00
tblVehicleTrips	CW_TTP	33.00	0.00
tblVehicleTrips	DV_TP	51.00	0.00
tblVehicleTrips	PB_TP	28.00	0.00
tblVehicleTrips	PR_TP	21.00	100.00
tblVehicleTrips	ST_TR	23.72	68.95
tblVehicleTrips	SU_TR	11.88	36.26
tblVehicleTrips	WD_TR	23.72	72.52
tblWater	IndoorWaterUseRate	0.00	4,196,280.00

2.0 Emissions Summary

2.1 Overall Construction

Unmitigated Construction

	ROG	NOx	CO	SO2	Fugitive PM10	Exhaust PM10	PM10 Total	Fugitive PM2.5	Exhaust PM2.5	PM2.5 Total	Bio- CO2	NBio- CO2	Total CO2	CH4	N2O	CO2e
Year	tons/yr										MT/yr					
2017	0.1787	1.3242	0.9248	1.5500e-003	0.0290	0.0793	0.1083	0.0107	0.0756	0.0863	0.0000	135.3355	135.3355	0.0275	0.0000	136.0225
2018	0.0702	0.2334	0.1925	3.3000e-004	3.0200e-003	0.0136	0.0166	8.1000e-004	0.0129	0.0137	0.0000	28.4791	28.4791	5.8000e-003	0.0000	28.6241
Maximum	**0.1787**	**1.3242**	**0.9248**	**1.5500e-003**	**0.0290**	**0.0793**	**0.1083**	**0.0107**	**0.0756**	**0.0863**	**0.0000**	**135.3355**	**135.3355**	**0.0275**	**0.0000**	**136.0225**

Mitigated Construction

	ROG	NOx	CO	SO2	Fugitive PM10	Exhaust PM10	PM10 Total	Fugitive PM2.5	Exhaust PM2.5	PM2.5 Total	Bio- CO2	NBio- CO2	Total CO2	CH4	N2O	CO2e
Year	tons/yr										MT/yr					
2017	0.1787	1.3242	0.9248	1.5500e-003	0.0194	0.0793	0.0987	6.3700e-003	0.0756	0.0819	0.0000	135.3354	135.3354	0.0275	0.0000	136.0223
2018	0.0702	0.2334	0.1925	3.3000e-004	3.0200e-003	0.0136	0.0166	8.1000e-004	0.0129	0.0137	0.0000	28.4790	28.4790	5.8000e-003	0.0000	28.6241
Maximum	**0.1787**	**1.3242**	**0.9248**	**1.5500e-003**	**0.0194**	**0.0793**	**0.0987**	**6.3700e-003**	**0.0756**	**0.0819**	**0.0000**	**135.3354**	**135.3354**	**0.0275**	**0.0000**	**136.0223**

	ROG	NOx	CO	SO2	Fugitive PM10	Exhaust PM10	PM10 Total	Fugitive PM2.5	Exhaust PM2.5	PM2.5 Total	Bio- CO2	NBio-CO2	Total CO2	CH4	N20	CO2e
Percent Reduction	**0.00**	**0.00**	**0.00**	**0.00**	**29.86**	**0.00**	**7.64**	**37.73**	**0.00**	**4.35**	**0.00**	**0.00**	**0.00**	**0.00**	**0.00**	**0.00**

Quarter	Start Date	End Date	Maximum Unmitigated ROG + NOX (tons/quarter)	Maximum Mitigated ROG + NOX (tons/quarter)
1	**8-1-2017**	**10-31-2017**	0.9176	0.9176
2	**11-1-2017**	**1-31-2018**	0.8151	0.8151
3	**2-1-2018**	**4-30-2018**	0.0635	0.0635
		Highest	0.9176	0.9176

2.2 Overall Operational

Unmitigated Operational

	ROG	NOx	CO	SO2	Fugitive PM10	Exhaust PM10	PM10 Total	Fugitive PM2.5	Exhaust PM2.5	PM2.5 Total	Bio- CO2	NBio- CO2	Total CO2	CH4	N2O	CO2e
Category	tons/yr										MT/yr					
Area	0.0318	0.0000	1.0000e-004	0.0000		0.0000	0.0000		0.0000	0.0000	0.0000	2.0000e-004	2.0000e-004	0.0000	0.0000	2.1000e-004
Energy	3.8000e-004	3.4700e-003	2.9200e-003	2.0000e-005		2.6000e-004	2.6000e-004		2.6000e-004	2.6000e-004	0.0000	64.9548	64.9548	2.6000e-003	5.9000e-004	65.1961
Mobile	0.1091	0.5251	1.4661	4.0800e-003	0.3025	4.9900e-003	0.3075	0.0811	4.7000e-003	0.0858	0.0000	375.1296	375.1296	0.0235	0.0000	375.7165
Waste						0.0000	0.0000		0.0000	0.0000	5.4320	0.0000	5.4320	0.3210	0.0000	13.4576
Water						0.0000	0.0000		0.0000	0.0000	1.4477	19.7277	21.1754	0.1495	3.6800e-003	26.0095
Total	**0.1413**	**0.5286**	**1.4691**	**4.1000e-003**	**0.3025**	**5.2500e-003**	**0.3078**	**0.0811**	**4.9600e-003**	**0.0861**	**6.8797**	**459.8123**	**466.6920**	**0.4966**	**4.2700e-003**	**480.3801**

2.2 Overall Operational

Mitigated Operational

	ROG	NOx	CO	SO2	Fugitive PM10	Exhaust PM10	PM10 Total	Fugitive PM2.5	Exhaust PM2.5	PM2.5 Total	Bio- CO2	NBio- CO2	Total CO2	CH4	N2O	CO2e
Category	tons/yr										MT/yr					
Area	0.0318	0.0000	1.0000e-004	0.0000		0.0000	0.0000		0.0000	0.0000	0.0000	2.0000e-004	2.0000e-004	0.0000	0.0000	2.1000e-004
Energy	3.8000e-004	3.4700e-003	2.9200e-003	2.0000e-005		2.6000e-004	2.6000e-004		2.6000e-004	2.6000e-004	0.0000	64.9548	64.9548	2.6000e-003	5.9000e-004	65.1961
Mobile	0.1091	0.5251	1.4661	4.0800e-003	0.3025	4.9900e-003	0.3075	0.0811	4.7000e-003	0.0858	0.0000	375.1296	375.1296	0.0235	0.0000	375.7165
Waste						0.0000	0.0000		0.0000	0.0000	3.0963	0.0000	3.0963	0.1830	0.0000	7.6709
Water						0.0000	0.0000		0.0000	0.0000	1.1582	15.9414	17.0995	0.1196	2.9400e-003	20.9674
Total	**0.1413**	**0.5286**	**1.4691**	**4.1000e-003**	**0.3025**	**5.2500e-003**	**0.3078**	**0.0811**	**4.9600e-003**	**0.0861**	**4.2544**	**456.0260**	**460.2804**	**0.3287**	**3.5300e-003**	**469.5511**

	ROG	NOx	CO	SO2	Fugitive PM10	Exhaust PM10	PM10 Total	Fugitive PM2.5	Exhaust PM2.5	PM2.5 Total	Bio- CO2	NBio-CO2	Total CO2	CH4	N20	CO2e
Percent Reduction	**0.00**	**0.00**	**0.00**	**0.00**	**0.00**	**0.00**	**0.00**	**0.00**	**0.00**	**0.00**	**38.16**	**0.82**	**1.37**	**33.82**	**17.33**	**2.25**

2.3 Vegetation

Vegetation

	CO2e
Category	MT
New Trees	21.9480
Vegetation Land Change	0.0000
Total	**21.9480**

3.0 Construction Detail

Construction Phase

Phase Number	Phase Name	Phase Type	Start Date	End Date	Num Days Week	Num Days	Phase Description
1	Demolition	Demolition	8/1/2017	8/28/2017	5	20	
2	Grading	Grading	8/29/2017	9/1/2017	5	4	
3	Building Construction	Building Construction	9/2/2017	1/20/2018	5	100	
4	Paving	Paving	1/21/2018	2/2/2018	5	10	
5	Architectural Coating	Architectural Coating	2/3/2018	2/16/2018	5	10	

Acres of Grading (Site Preparation Phase): 0

Acres of Grading (Grading Phase): 1.5

Acres of Paving: 0.95

Residential Indoor: 0; Residential Outdoor: 0; Non-Residential Indoor: 10,508; Non-Residential Outdoor: 3,503; Striped Parking Area: 2,483 (Architectural Coating – sqft)

OffRoad Equipment

Phase Name	Offroad Equipment Type	Amount	Usage Hours	Horse Power	Load Factor
Demolition	Concrete/Industrial Saws	1	8.00	81	0.73
Demolition	Rubber Tired Dozers	1	8.00	247	0.40
Demolition	Tractors/Loaders/Backhoes	3	8.00	97	0.37
Grading	Graders	1	8.00	187	0.41
Grading	Rubber Tired Dozers	1	8.00	247	0.40
Grading	Tractors/Loaders/Backhoes	1	8.00	97	0.37
Building Construction	Cranes	1	8.00	231	0.29
Building Construction	Forklifts	1	8.00	89	0.20
Building Construction	Generator Sets	1	8.00	84	0.74
Building Construction	Tractors/Loaders/Backhoes	1	8.00	97	0.37
Building Construction	Welders	3	8.00	46	0.45
Paving	Cement and Mortar Mixers	1	8.00	9	0.56
Paving	Pavers	1	8.00	130	0.42
Paving	Paving Equipment	1	8.00	132	0.36
Paving	Rollers	1	8.00	80	0.38
Paving	Tractors/Loaders/Backhoes	1	8.00	97	0.37
Architectural Coating	Air Compressors	1	8.00	78	0.48

Trips and VMT

Phase Name	Offroad Equipment Count	Worker Trip Number	Vendor Trip Number	Hauling Trip Number	Worker Trip Length	Vendor Trip Length	Hauling Trip Length	Worker Vehicle Class	Vendor Vehicle Class	Hauling Vehicle Class
Demolition	5	13.00	0.00	26.00	14.70	6.90	20.00	LD_Mix	HDT_Mix	HHDT
Grading	3	8.00	2.00	0.00	14.70	6.90	20.00	LD_Mix	HDT_Mix	HHDT
Building Construction	7	20.00	8.00	0.00	14.70	6.90	20.00	LD_Mix	HDT_Mix	HHDT
Paving	5	13.00	2.00	0.00	14.70	6.90	20.00	LD_Mix	HDT_Mix	HHDT
Architectural Coating	1	4.00	0.00	0.00	14.70	6.90	20.00	LD_Mix	HDT_Mix	HHDT

3.1 Mitigation Measures Construction

Water Exposed Area

3.2 Demolition - 2017

Unmitigated Construction On-Site

	ROG	NOx	CO	SO2	Fugitive PM10	Exhaust PM10	PM10 Total	Fugitive PM2.5	Exhaust PM2.5	PM2.5 Total	Bio- CO2	NBio- CO2	Total CO2	CH4	N2O	CO2e
Category	tons/yr										MT/yr					
Fugitive Dust					2.8200e-003	0.0000	2.8200e-003	4.3000e-004	0.0000	4.3000e-004	0.0000	0.0000	0.0000	0.0000	0.0000	0.0000
Off-Road	0.0276	0.2676	0.1556	2.4000e-004		0.0165	0.0165		0.0154	0.0154	0.0000	21.9668	21.9668	5.5600e-003	0.0000	22.1057
Total	**0.0276**	**0.2676**	**0.1556**	**2.4000e-004**	**2.8200e-003**	**0.0165**	**0.0193**	**4.3000e-004**	**0.0154**	**0.0158**	**0.0000**	**21.9668**	**21.9668**	**5.5600e-003**	**0.0000**	**22.1057**

3.2 Demolition - 2017

Unmitigated Construction Off-Site

	ROG	NOx	CO	SO2	Fugitive PM10	Exhaust PM10	PM10 Total	Fugitive PM2.5	Exhaust PM2.5	PM2.5 Total	Bio- CO2	NBio- CO2	Total CO2	CH4	N2O	CO2e
Category	tons/yr										MT/yr					
Hauling	1.5000e-004	4.6800e-003	9.5000e-004	1.0000e-005	2.2000e-004	2.0000e-005	2.5000e-004	6.0000e-005	2.0000e-005	8.0000e-005	0.0000	1.0341	1.0341	7.0000e-005	0.0000	1.0359
Vendor	0.0000	0.0000	0.0000	0.0000	0.0000	0.0000	0.0000	0.0000	0.0000	0.0000	0.0000	0.0000	0.0000	0.0000	0.0000	0.0000
Worker	8.2000e-004	7.1000e-004	7.5900e-003	2.0000e-005	1.4200e-003	1.0000e-005	1.4400e-003	3.8000e-004	1.0000e-005	3.9000e-004	0.0000	1.4554	1.4554	6.0000e-005	0.0000	1.4569
Total	**9.7000e-004**	**5.3900e-003**	**8.5400e-003**	**3.0000e-005**	**1.6400e-003**	**3.0000e-005**	**1.6900e-003**	**4.4000e-004**	**3.0000e-005**	**4.7000e-004**	**0.0000**	**2.4894**	**2.4894**	**1.3000e-004**	**0.0000**	**2.4928**

Mitigated Construction On-Site

	ROG	NOx	CO	SO2	Fugitive PM10	Exhaust PM10	PM10 Total	Fugitive PM2.5	Exhaust PM2.5	PM2.5 Total	Bio- CO2	NBio- CO2	Total CO2	CH4	N2O	CO2e
Category	tons/yr										MT/yr					
Fugitive Dust					1.1000e-003	0.0000	1.1000e-003	1.7000e-004	0.0000	1.7000e-004	0.0000	0.0000	0.0000	0.0000	0.0000	0.0000
Off-Road	0.0276	0.2676	0.1556	2.4000e-004		0.0165	0.0165		0.0154	0.0154	0.0000	21.9668	21.9668	5.5600e-003	0.0000	22.1057
Total	**0.0276**	**0.2676**	**0.1556**	**2.4000e-004**	**1.1000e-003**	**0.0165**	**0.0176**	**1.7000e-004**	**0.0154**	**0.0156**	**0.0000**	**21.9668**	**21.9668**	**5.5600e-003**	**0.0000**	**22.1057**

3.2 Demolition - 2017

Mitigated Construction Off-Site

	ROG	NOx	CO	SO2	Fugitive PM10	Exhaust PM10	PM10 Total	Fugitive PM2.5	Exhaust PM2.5	PM2.5 Total	Bio- CO2	NBio- CO2	Total CO2	CH4	N2O	CO2e
Category	tons/yr										MT/yr					
Hauling	1.5000e-004	4.6800e-003	9.5000e-004	1.0000e-005	2.2000e-004	2.0000e-005	2.5000e-004	6.0000e-005	2.0000e-005	8.0000e-005	0.0000	1.0341	1.0341	7.0000e-005	0.0000	1.0359
Vendor	0.0000	0.0000	0.0000	0.0000	0.0000	0.0000	0.0000	0.0000	0.0000	0.0000	0.0000	0.0000	0.0000	0.0000	0.0000	0.0000
Worker	8.2000e-004	7.1000e-004	7.5900e-003	2.0000e-005	1.4200e-003	1.0000e-005	1.4400e-003	3.8000e-004	1.0000e-005	3.9000e-004	0.0000	1.4554	1.4554	6.0000e-005	0.0000	1.4569
Total	**9.7000e-004**	**5.3900e-003**	**8.5400e-003**	**3.0000e-005**	**1.6400e-003**	**3.0000e-005**	**1.6900e-003**	**4.4000e-004**	**3.0000e-005**	**4.7000e-004**	**0.0000**	**2.4894**	**2.4894**	**1.3000e-004**	**0.0000**	**2.4928**

3.3 Grading - 2017

Unmitigated Construction On-Site

	ROG	NOx	CO	SO2	Fugitive PM10	Exhaust PM10	PM10 Total	Fugitive PM2.5	Exhaust PM2.5	PM2.5 Total	Bio- CO2	NBio- CO2	Total CO2	CH4	N2O	CO2e
Category	tons/yr										MT/yr					
Fugitive Dust					0.0128	0.0000	0.0128	6.7100e-003	0.0000	6.7100e-003	0.0000	0.0000	0.0000	0.0000	0.0000	0.0000
Off-Road	4.1700e-003	0.0478	0.0180	4.0000e-005		2.2500e-003	2.2500e-003		2.0700e-003	2.0700e-003	0.0000	3.3992	3.3992	1.0400e-003	0.0000	3.4252
Total	**4.1700e-003**	**0.0478**	**0.0180**	**4.0000e-005**	**0.0128**	**2.2500e-003**	**0.0151**	**6.7100e-003**	**2.0700e-003**	**8.7800e-003**	**0.0000**	**3.3992**	**3.3992**	**1.0400e-003**	**0.0000**	**3.4252**

3.3 Grading - 2017

Unmitigated Construction Off-Site

	ROG	NOx	CO	SO2	Fugitive PM10	Exhaust PM10	PM10 Total	Fugitive PM2.5	Exhaust PM2.5	PM2.5 Total	Bio- CO2	NBio- CO2	Total CO2	CH4	N2O	CO2e
Category	tons/yr										MT/yr					
Hauling	0.0000	0.0000	0.0000	0.0000	0.0000	0.0000	0.0000	0.0000	0.0000	0.0000	0.0000	0.0000	0.0000	0.0000	0.0000	0.0000
Vendor	2.0000e-005	5.3000e-004	1.6000e-004	0.0000	3.0000e-005	0.0000	3.0000e-005	1.0000e-005	0.0000	1.0000e-005	0.0000	0.1014	0.1014	1.0000e-005	0.0000	0.1016
Worker	1.0000e-004	9.0000e-005	9.3000e-004	0.0000	1.8000e-004	0.0000	1.8000e-004	5.0000e-005	0.0000	5.0000e-005	0.0000	0.1791	0.1791	1.0000e-005	0.0000	0.1793
Total	**1.2000e-004**	**6.2000e-004**	**1.0900e-003**	**0.0000**	**2.1000e-004**	**0.0000**	**2.1000e-004**	**6.0000e-005**	**0.0000**	**6.0000e-005**	**0.0000**	**0.2805**	**0.2805**	**2.0000e-005**	**0.0000**	**0.2809**

Mitigated Construction On-Site

	ROG	NOx	CO	SO2	Fugitive PM10	Exhaust PM10	PM10 Total	Fugitive PM2.5	Exhaust PM2.5	PM2.5 Total	Bio- CO2	NBio- CO2	Total CO2	CH4	N2O	CO2e
Category	tons/yr										MT/yr					
Fugitive Dust					5.0100e-003	0.0000	5.0100e-003	2.6200e-003	0.0000	2.6200e-003	0.0000	0.0000	0.0000	0.0000	0.0000	0.0000
Off-Road	4.1700e-003	0.0478	0.0180	4.0000e-005		2.2500e-003	2.2500e-003		2.0700e-003	2.0700e-003	0.0000	3.3992	3.3992	1.0400e-003	0.0000	3.4252
Total	**4.1700e-003**	**0.0478**	**0.0180**	**4.0000e-005**	**5.0100e-003**	**2.2500e-003**	**7.2600e-003**	**2.6200e-003**	**2.0700e-003**	**4.6900e-003**	**0.0000**	**3.3992**	**3.3992**	**1.0400e-003**	**0.0000**	**3.4252**

3.3 Grading - 2017

Mitigated Construction Off-Site

	ROG	NOx	CO	SO2	Fugitive PM10	Exhaust PM10	PM10 Total	Fugitive PM2.5	Exhaust PM2.5	PM2.5 Total	Bio- CO2	NBio- CO2	Total CO2	CH4	N2O	CO2e
Category	tons/yr										MT/yr					
Hauling	0.0000	0.0000	0.0000	0.0000	0.0000	0.0000	0.0000	0.0000	0.0000	0.0000	0.0000	0.0000	0.0000	0.0000	0.0000	0.0000
Vendor	2.0000e-005	5.3000e-004	1.6000e-004	0.0000	3.0000e-005	0.0000	3.0000e-005	1.0000e-005	0.0000	1.0000e-005	0.0000	0.1014	0.1014	1.0000e-005	0.0000	0.1016
Worker	1.0000e-004	9.0000e-005	9.3000e-004	0.0000	1.8000e-004	0.0000	1.8000e-004	5.0000e-005	0.0000	5.0000e-005	0.0000	0.1791	0.1791	1.0000e-005	0.0000	0.1793
Total	**1.2000e-004**	**6.2000e-004**	**1.0900e-003**	**0.0000**	**2.1000e-004**	**0.0000**	**2.1000e-004**	**6.0000e-005**	**0.0000**	**6.0000e-005**	**0.0000**	**0.2805**	**0.2805**	**2.0000e-005**	**0.0000**	**0.2809**

3.4 Building Construction - 2017

Unmitigated Construction On-Site

	ROG	NOx	CO	SO2	Fugitive PM10	Exhaust PM10	PM10 Total	Fugitive PM2.5	Exhaust PM2.5	PM2.5 Total	Bio- CO2	NBio- CO2	Total CO2	CH4	N2O	CO2e
Category	tons/yr										MT/yr					
Off-Road	0.1387	0.9528	0.6788	1.0500e-003		0.0601	0.0601		0.0576	0.0576	0.0000	89.0627	89.0627	0.0197	0.0000	89.5556
Total	**0.1387**	**0.9528**	**0.6788**	**1.0500e-003**		**0.0601**	**0.0601**		**0.0576**	**0.0576**	**0.0000**	**89.0627**	**89.0627**	**0.0197**	**0.0000**	**89.5556**

3.4 Building Construction - 2017

Unmitigated Construction Off-Site

	ROG	NOx	CO	SO2	Fugitive PM10	Exhaust PM10	PM10 Total	Fugitive PM2.5	Exhaust PM2.5	PM2.5 Total	Bio- CO2	NBio- CO2	Total CO2	CH4	N2O	CO2e
Category	tons/yr										MT/yr					
Hauling	0.0000	0.0000	0.0000	0.0000	0.0000	0.0000	0.0000	0.0000	0.0000	0.0000	0.0000	0.0000	0.0000	0.0000	0.0000	0.0000
Vendor	1.8100e-003	0.0454	0.0132	9.0000e-005	2.1400e-003	3.7000e-004	2.5200e-003	6.2000e-004	3.6000e-004	9.8000e-004	0.0000	8.6211	8.6211	6.2000e-004	0.0000	8.6366
Worker	5.3400e-003	4.6300e-003	0.0496	1.1000e-004	9.3100e-003	9.0000e-005	9.4000e-003	2.4700e-003	8.0000e-005	2.5600e-003	0.0000	9.5157	9.5157	4.0000e-004	0.0000	9.5257
Total	**7.1500e-003**	**0.0500**	**0.0628**	**2.0000e-004**	**0.0115**	**4.6000e-004**	**0.0119**	**3.0900e-003**	**4.4000e-004**	**3.5400e-003**	**0.0000**	**18.1368**	**18.1368**	**1.0200e-003**	**0.0000**	**18.1623**

Mitigated Construction On-Site

	ROG	NOx	CO	SO2	Fugitive PM10	Exhaust PM10	PM10 Total	Fugitive PM2.5	Exhaust PM2.5	PM2.5 Total	Bio- CO2	NBio- CO2	Total CO2	CH4	N2O	CO2e
Category	tons/yr										MT/yr					
Off-Road	0.1387	0.9528	0.6788	1.0500e-003		0.0601	0.0601		0.0576	0.0576	0.0000	89.0626	89.0626	0.0197	0.0000	89.5555
Total	**0.1387**	**0.9528**	**0.6788**	**1.0500e-003**		**0.0601**	**0.0601**		**0.0576**	**0.0576**	**0.0000**	**89.0626**	**89.0626**	**0.0197**	**0.0000**	**89.5555**

3.4 Building Construction - 2017

Mitigated Construction Off-Site

	ROG	NOx	CO	SO2	Fugitive PM10	Exhaust PM10	PM10 Total	Fugitive PM2.5	Exhaust PM2.5	PM2.5 Total	Bio- CO2	NBio- CO2	Total CO2	CH4	N2O	CO2e
Category	tons/yr										MT/yr					
Hauling	0.0000	0.0000	0.0000	0.0000	0.0000	0.0000	0.0000	0.0000	0.0000	0.0000	0.0000	0.0000	0.0000	0.0000	0.0000	0.0000
Vendor	1.8100e-003	0.0454	0.0132	9.0000e-005	2.1400e-003	3.7000e-004	2.5200e-003	6.2000e-004	3.6000e-004	9.8000e-004	0.0000	8.6211	8.6211	6.2000e-004	0.0000	8.6366
Worker	5.3400e-003	4.6300e-003	0.0496	1.1000e-004	9.3100e-003	9.0000e-005	9.4000e-003	2.4700e-003	8.0000e-005	2.5600e-003	0.0000	9.5157	9.5157	4.0000e-004	0.0000	9.5257
Total	**7.1500e-003**	**0.0500**	**0.0628**	**2.0000e-004**	**0.0115**	**4.6000e-004**	**0.0119**	**3.0900e-003**	**4.4000e-004**	**3.5400e-003**	**0.0000**	**18.1368**	**18.1368**	**1.0200e-003**	**0.0000**	**18.1623**

3.4 Building Construction - 2018

Unmitigated Construction On-Site

	ROG	NOx	CO	SO2	Fugitive PM10	Exhaust PM10	PM10 Total	Fugitive PM2.5	Exhaust PM2.5	PM2.5 Total	Bio- CO2	NBio- CO2	Total CO2	CH4	N2O	CO2e
Category	tons/yr										MT/yr					
Off-Road	0.0213	0.1514	0.1155	1.8000e-004		9.0700e-003	9.0700e-003		8.7100e-003	8.7100e-003	0.0000	15.5988	15.5988	3.3400e-003	0.0000	15.6822
Total	**0.0213**	**0.1514**	**0.1155**	**1.8000e-004**		**9.0700e-003**	**9.0700e-003**		**8.7100e-003**	**8.7100e-003**	**0.0000**	**15.5988**	**15.5988**	**3.3400e-003**	**0.0000**	**15.6822**

3.4 Building Construction - 2018

Unmitigated Construction Off-Site

	ROG	NOx	CO	SO2	Fugitive PM10	Exhaust PM10	PM10 Total	Fugitive PM2.5	Exhaust PM2.5	PM2.5 Total	Bio- CO2	NBio- CO2	Total CO2	CH4	N2O	CO2e
Category	tons/yr										MT/yr					
Hauling	0.0000	0.0000	0.0000	0.0000	0.0000	0.0000	0.0000	0.0000	0.0000	0.0000	0.0000	0.0000	0.0000	0.0000	0.0000	0.0000
Vendor	2.8000e-004	7.5100e-003	2.1100e-003	2.0000e-005	3.8000e-004	5.0000e-005	4.3000e-004	1.1000e-004	5.0000e-005	1.6000e-004	0.0000	1.5160	1.5160	1.0000e-004	0.0000	1.5186
Worker	8.3000e-004	7.1000e-004	7.6500e-003	2.0000e-005	1.6400e-003	1.0000e-005	1.6600e-003	4.4000e-004	1.0000e-005	4.5000e-004	0.0000	1.6332	1.6332	6.0000e-005	0.0000	1.6347
Total	**1.1100e-003**	**8.2200e-003**	**9.7600e-003**	**4.0000e-005**	**2.0200e-003**	**6.0000e-005**	**2.0900e-003**	**5.5000e-004**	**6.0000e-005**	**6.1000e-004**	**0.0000**	**3.1492**	**3.1492**	**1.6000e-004**	**0.0000**	**3.1533**

Mitigated Construction On-Site

	ROG	NOx	CO	SO2	Fugitive PM10	Exhaust PM10	PM10 Total	Fugitive PM2.5	Exhaust PM2.5	PM2.5 Total	Bio- CO2	NBio- CO2	Total CO2	CH4	N2O	CO2e
Category	tons/yr										MT/yr					
Off-Road	0.0213	0.1514	0.1155	1.8000e-004		9.0700e-003	9.0700e-003		8.7100e-003	8.7100e-003	0.0000	15.5988	15.5988	3.3400e-003	0.0000	15.6822
Total	**0.0213**	**0.1514**	**0.1155**	**1.8000e-004**		**9.0700e-003**	**9.0700e-003**		**8.7100e-003**	**8.7100e-003**	**0.0000**	**15.5988**	**15.5988**	**3.3400e-003**	**0.0000**	**15.6822**

3.4 Building Construction - 2018

Mitigated Construction Off-Site

	ROG	NOx	CO	SO2	Fugitive PM10	Exhaust PM10	PM10 Total	Fugitive PM2.5	Exhaust PM2.5	PM2.5 Total	Bio- CO2	NBio- CO2	Total CO2	CH4	N2O	CO2e
Category	tons/yr										MT/yr					
Hauling	0.0000	0.0000	0.0000	0.0000	0.0000	0.0000	0.0000	0.0000	0.0000	0.0000	0.0000	0.0000	0.0000	0.0000	0.0000	0.0000
Vendor	2.8000e-004	7.5100e-003	2.1100e-003	2.0000e-005	3.8000e-004	5.0000e-005	4.3000e-004	1.1000e-004	5.0000e-005	1.6000e-004	0.0000	1.5160	1.5160	1.0000e-004	0.0000	1.5186
Worker	8.3000e-004	7.1000e-004	7.6500e-003	2.0000e-005	1.6400e-003	1.0000e-005	1.6600e-003	4.4000e-004	1.0000e-005	4.5000e-004	0.0000	1.6332	1.6332	6.0000e-005	0.0000	1.6347
Total	**1.1100e-003**	**8.2200e-003**	**9.7600e-003**	**4.0000e-005**	**2.0200e-003**	**6.0000e-005**	**2.0900e-003**	**5.5000e-004**	**6.0000e-005**	**6.1000e-004**	**0.0000**	**3.1492**	**3.1492**	**1.6000e-004**	**0.0000**	**3.1533**

3.5 Paving - 2018

Unmitigated Construction On-Site

	ROG	NOx	CO	SO2	Fugitive PM10	Exhaust PM10	PM10 Total	Fugitive PM2.5	Exhaust PM2.5	PM2.5 Total	Bio- CO2	NBio- CO2	Total CO2	CH4	N2O	CO2e
Category	tons/yr										MT/yr					
Off-Road	5.7300e-003	0.0588	0.0502	8.0000e-005		3.3900e-003	3.3900e-003		3.1300e-003	3.1300e-003	0.0000	6.8508	6.8508	2.0900e-003	0.0000	6.9029
Paving	1.2400e-003					0.0000	0.0000		0.0000	0.0000	0.0000	0.0000	0.0000	0.0000	0.0000	0.0000
Total	**6.9700e-003**	**0.0588**	**0.0502**	**8.0000e-005**		**3.3900e-003**	**3.3900e-003**		**3.1300e-003**	**3.1300e-003**	**0.0000**	**6.8508**	**6.8508**	**2.0900e-003**	**0.0000**	**6.9029**

3.5 Paving - 2018

Unmitigated Construction Off-Site

	ROG	NOx	CO	SO2	Fugitive PM10	Exhaust PM10	PM10 Total	Fugitive PM2.5	Exhaust PM2.5	PM2.5 Total	Bio- CO2	NBio- CO2	Total CO2	CH4	N2O	CO2e
Category	tons/yr										MT/yr					
Hauling	0.0000	0.0000	0.0000	0.0000	0.0000	0.0000	0.0000	0.0000	0.0000	0.0000	0.0000	0.0000	0.0000	0.0000	0.0000	0.0000
Vendor	5.0000e-005	1.2500e-003	3.5000e-004	0.0000	6.0000e-005	1.0000e-005	7.0000e-005	2.0000e-005	1.0000e-005	3.0000e-005	0.0000	0.2527	0.2527	2.0000e-005	0.0000	0.2531
Worker	3.6000e-004	3.1000e-004	3.3100e-003	1.0000e-005	7.1000e-004	1.0000e-005	7.2000e-004	1.9000e-004	1.0000e-005	2.0000e-004	0.0000	0.7077	0.7077	3.0000e-005	0.0000	0.7084
Total	**4.1000e-004**	**1.5600e-003**	**3.6600e-003**	**1.0000e-005**	**7.7000e-004**	**2.0000e-005**	**7.9000e-004**	**2.1000e-004**	**2.0000e-005**	**2.3000e-004**	**0.0000**	**0.9604**	**0.9604**	**5.0000e-005**	**0.0000**	**0.9615**

Mitigated Construction On-Site

	ROG	NOx	CO	SO2	Fugitive PM10	Exhaust PM10	PM10 Total	Fugitive PM2.5	Exhaust PM2.5	PM2.5 Total	Bio- CO2	NBio- CO2	Total CO2	CH4	N2O	CO2e
Category	tons/yr										MT/yr					
Off-Road	5.7300e-003	0.0588	0.0502	8.0000e-005		3.3900e-003	3.3900e-003		3.1300e-003	3.1300e-003	0.0000	6.8508	6.8508	2.0900e-003	0.0000	6.9029
Paving	1.2400e-003					0.0000	0.0000		0.0000	0.0000	0.0000	0.0000	0.0000	0.0000	0.0000	0.0000
Total	**6.9700e-003**	**0.0588**	**0.0502**	**8.0000e-005**		**3.3900e-003**	**3.3900e-003**		**3.1300e-003**	**3.1300e-003**	**0.0000**	**6.8508**	**6.8508**	**2.0900e-003**	**0.0000**	**6.9029**

3.5 Paving - 2018

Mitigated Construction Off-Site

	ROG	NOx	CO	SO2	Fugitive PM10	Exhaust PM10	PM10 Total	Fugitive PM2.5	Exhaust PM2.5	PM2.5 Total	Bio- CO2	NBio- CO2	Total CO2	CH4	N2O	CO2e
Category	tons/yr										MT/yr					
Hauling	0.0000	0.0000	0.0000	0.0000	0.0000	0.0000	0.0000	0.0000	0.0000	0.0000	0.0000	0.0000	0.0000	0.0000	0.0000	0.0000
Vendor	5.0000e-005	1.2500e-003	3.5000e-004	0.0000	6.0000e-005	1.0000e-005	7.0000e-005	2.0000e-005	1.0000e-005	3.0000e-005	0.0000	0.2527	0.2527	2.0000e-005	0.0000	0.2531
Worker	3.6000e-004	3.1000e-004	3.3100e-003	1.0000e-005	7.1000e-004	1.0000e-005	7.2000e-004	1.9000e-004	1.0000e-005	2.0000e-004	0.0000	0.7077	0.7077	3.0000e-005	0.0000	0.7084
Total	**4.1000e-004**	**1.5600e-003**	**3.6600e-003**	**1.0000e-005**	**7.7000e-004**	**2.0000e-005**	**7.9000e-004**	**2.1000e-004**	**2.0000e-005**	**2.3000e-004**	**0.0000**	**0.9604**	**0.9604**	**5.0000e-005**	**0.0000**	**0.9615**

3.6 Architectural Coating - 2018

Unmitigated Construction On-Site

	ROG	NOx	CO	SO2	Fugitive PM10	Exhaust PM10	PM10 Total	Fugitive PM2.5	Exhaust PM2.5	PM2.5 Total	Bio- CO2	NBio- CO2	Total CO2	CH4	N2O	CO2e
Category	tons/yr										MT/yr					
Archit. Coating	0.0382					0.0000	0.0000		0.0000	0.0000	0.0000	0.0000	0.0000	0.0000	0.0000	0.0000
Off-Road	1.9900e-003	0.0134	0.0124	2.0000e-005		1.0000e-003	1.0000e-003		1.0000e-003	1.0000e-003	0.0000	1.7022	1.7022	1.6000e-004	0.0000	1.7062
Total	**0.0402**	**0.0134**	**0.0124**	**2.0000e-005**		**1.0000e-003**	**1.0000e-003**		**1.0000e-003**	**1.0000e-003**	**0.0000**	**1.7022**	**1.7022**	**1.6000e-004**	**0.0000**	**1.7062**

3.6 Architectural Coating - 2018

Unmitigated Construction Off-Site

	ROG	NOx	CO	SO2	Fugitive PM10	Exhaust PM10	PM10 Total	Fugitive PM2.5	Exhaust PM2.5	PM2.5 Total	Bio- CO2	NBio- CO2	Total CO2	CH4	N2O	CO2e
Category	tons/yr										MT/yr					
Hauling	0.0000	0.0000	0.0000	0.0000	0.0000	0.0000	0.0000	0.0000	0.0000	0.0000	0.0000	0.0000	0.0000	0.0000	0.0000	0.0000
Vendor	0.0000	0.0000	0.0000	0.0000	0.0000	0.0000	0.0000	0.0000	0.0000	0.0000	0.0000	0.0000	0.0000	0.0000	0.0000	0.0000
Worker	1.1000e-004	9.0000e-005	1.0200e-003	0.0000	2.2000e-004	0.0000	2.2000e-004	6.0000e-005	0.0000	6.0000e-005	0.0000	0.2178	0.2178	1.0000e-005	0.0000	0.2180
Total	**1.1000e-004**	**9.0000e-005**	**1.0200e-003**	**0.0000**	**2.2000e-004**	**0.0000**	**2.2000e-004**	**6.0000e-005**	**0.0000**	**6.0000e-005**	**0.0000**	**0.2178**	**0.2178**	**1.0000e-005**	**0.0000**	**0.2180**

Mitigated Construction On-Site

	ROG	NOx	CO	SO2	Fugitive PM10	Exhaust PM10	PM10 Total	Fugitive PM2.5	Exhaust PM2.5	PM2.5 Total	Bio- CO2	NBio- CO2	Total CO2	CH4	N2O	CO2e
Category	tons/yr										MT/yr					
Archit. Coating	0.0382					0.0000	0.0000		0.0000	0.0000	0.0000	0.0000	0.0000	0.0000	0.0000	0.0000
Off-Road	1.9900e-003	0.0134	0.0124	2.0000e-005		1.0000e-003	1.0000e-003		1.0000e-003	1.0000e-003	0.0000	1.7022	1.7022	1.6000e-004	0.0000	1.7062
Total	**0.0402**	**0.0134**	**0.0124**	**2.0000e-005**		**1.0000e-003**	**1.0000e-003**		**1.0000e-003**	**1.0000e-003**	**0.0000**	**1.7022**	**1.7022**	**1.6000e-004**	**0.0000**	**1.7062**

3.6 Architectural Coating - 2018

Mitigated Construction Off-Site

	ROG	NOx	CO	SO2	Fugitive PM10	Exhaust PM10	PM10 Total	Fugitive PM2.5	Exhaust PM2.5	PM2.5 Total	Bio- CO2	NBio- CO2	Total CO2	CH4	N2O	CO2e
Category	tons/yr										MT/yr					
Hauling	0.0000	0.0000	0.0000	0.0000	0.0000	0.0000	0.0000	0.0000	0.0000	0.0000	0.0000	0.0000	0.0000	0.0000	0.0000	0.0000
Vendor	0.0000	0.0000	0.0000	0.0000	0.0000	0.0000	0.0000	0.0000	0.0000	0.0000	0.0000	0.0000	0.0000	0.0000	0.0000	0.0000
Worker	1.1000e-004	9.0000e-005	1.0200e-003	0.0000	2.2000e-004	0.0000	2.2000e-004	6.0000e-005	0.0000	6.0000e-005	0.0000	0.2178	0.2178	1.0000e-005	0.0000	0.2180
Total	**1.1000e-004**	**9.0000e-005**	**1.0200e-003**	**0.0000**	**2.2000e-004**	**0.0000**	**2.2000e-004**	**6.0000e-005**	**0.0000**	**6.0000e-005**	**0.0000**	**0.2178**	**0.2178**	**1.0000e-005**	**0.0000**	**0.2180**

4.0 Operational Detail - Mobile

4.1 Mitigation Measures Mobile

	ROG	NOx	CO	SO2	Fugitive PM10	Exhaust PM10	PM10 Total	Fugitive PM2.5	Exhaust PM2.5	PM2.5 Total	Bio- CO2	NBio- CO2	Total CO2	CH4	N2O	CO2e
Category	tons/yr										MT/yr					
Mitigated	0.1091	0.5251	1.4661	4.0800e-003	0.3025	4.9900e-003	0.3075	0.0811	4.7000e-003	0.0858	0.0000	375.1296	375.1296	0.0235	0.0000	375.7165
Unmitigated	0.1091	0.5251	1.4661	4.0800e-003	0.3025	4.9900e-003	0.3075	0.0811	4.7000e-003	0.0858	0.0000	375.1296	375.1296	0.0235	0.0000	375.7165

4.2 Trip Summary Information

	Average Daily Trip Rate			Unmitigated	Mitigated
Land Use	Weekday	Saturday	Sunday	Annual VMT	Annual VMT
Automobile Care Center	282.83	268.91	141.41	796,924	796,924
Other Asphalt Surfaces	0.00	0.00	0.00		
User Defined Retail	0.00	0.00	0.00		
Total	282.83	268.91	141.41	796,924	796,924

4.3 Trip Type Information

	Miles			Trip %			Trip Purpose %		
Land Use	H-W or C-W	H-S or C-C	H-O or C-NW	H-W or C-W	H-S or C-C	H-O or C-NW	Primary	Diverted	Pass-by
Automobile Care Center	16.60	8.40	6.90	0.00	100.00	0.00	100	0	0
Other Asphalt Surfaces	16.60	8.40	6.90	0.00	0.00	0.00	0	0	0
User Defined Retail	16.60	8.40	6.90	0.00	0.00	0.00	0	0	0

4.4 Fleet Mix

Land Use	LDA	LDT1	LDT2	MDV	LHD1	LHD2	MHD	HHD	OBUS	UBUS	MCY	SBUS	MH
Other Asphalt Surfaces	0.547972	0.046127	0.199330	0.125604	0.017697	0.005953	0.018360	0.027618	0.002341	0.002583	0.004804	0.000667	0.000944
Automobile Care Center	0.547972	0.046127	0.199330	0.125604	0.017697	0.005953	0.018360	0.027618	0.002341	0.002583	0.004804	0.000667	0.000944
User Defined Retail	0.547972	0.046127	0.199330	0.125604	0.017697	0.005953	0.018360	0.027618	0.002341	0.002583	0.004804	0.000667	0.000944

5.0 Energy Detail

Historical Energy Use: N

5.1 Mitigation Measures Energy

	ROG	NOx	CO	SO2	Fugitive PM10	Exhaust PM10	PM10 Total	Fugitive PM2.5	Exhaust PM2.5	PM2.5 Total	Bio- CO2	NBio- CO2	Total CO2	CH4	N2O	CO2e
Category	tons/yr										MT/yr					
Electricity Mitigated						0.0000	0.0000		0.0000	0.0000	0.0000	61.1754	61.1754	2.5300e-003	5.2000e-004	61.3942
Electricity Unmitigated						0.0000	0.0000		0.0000	0.0000	0.0000	61.1754	61.1754	2.5300e-003	5.2000e-004	61.3942
NaturalGas Mitigated	3.8000e-004	3.4700e-003	2.9200e-003	2.0000e-005		2.6000e-004	2.6000e-004		2.6000e-004	2.6000e-004	0.0000	3.7794	3.7794	7.0000e-005	7.0000e-005	3.8019
NaturalGas Unmitigated	3.8000e-004	3.4700e-003	2.9200e-003	2.0000e-005		2.6000e-004	2.6000e-004		2.6000e-004	2.6000e-004	0.0000	3.7794	3.7794	7.0000e-005	7.0000e-005	3.8019

5.2 Energy by Land Use - NaturalGas

Unmitigated

	NaturalGas Use	ROG	NOx	CO	SO2	Fugitive PM10	Exhaust PM10	PM10 Total	Fugitive PM2.5	Exhaust PM2.5	PM2.5 Total	Bio- CO2	NBio- CO2	Total CO2	CH4	N2O	CO2e
Land Use	kBTU/yr	tons/yr										MT/yr					
Automobile Care Center	70824	3.8000e-004	3.4700e-003	2.9200e-003	2.0000e-005		2.6000e-004	2.6000e-004		2.6000e-004	2.6000e-004	0.0000	3.7794	3.7794	7.0000e-005	7.0000e-005	3.8019
Other Asphalt Surfaces	0	0.0000	0.0000	0.0000	0.0000		0.0000	0.0000		0.0000	0.0000	0.0000	0.0000	0.0000	0.0000	0.0000	0.0000
User Defined Retail	0	0.0000	0.0000	0.0000	0.0000		0.0000	0.0000		0.0000	0.0000	0.0000	0.0000	0.0000	0.0000	0.0000	0.0000
Total		**3.8000e-004**	**3.4700e-003**	**2.9200e-003**	**2.0000e-005**		**2.6000e-004**	**2.6000e-004**		**2.6000e-004**	**2.6000e-004**	**0.0000**	**3.7794**	**3.7794**	**7.0000e-005**	**7.0000e-005**	**3.8019**

Mitigated

	NaturalGas Use	ROG	NOx	CO	SO2	Fugitive PM10	Exhaust PM10	PM10 Total	Fugitive PM2.5	Exhaust PM2.5	PM2.5 Total	Bio- CO2	NBio- CO2	Total CO2	CH4	N2O	CO2e
Land Use	kBTU/yr	tons/yr										MT/yr					
Automobile Care Center	70824	3.8000e-004	3.4700e-003	2.9200e-003	2.0000e-005		2.6000e-004	2.6000e-004		2.6000e-004	2.6000e-004	0.0000	3.7794	3.7794	7.0000e-005	7.0000e-005	3.8019
Other Asphalt Surfaces	0	0.0000	0.0000	0.0000	0.0000		0.0000	0.0000		0.0000	0.0000	0.0000	0.0000	0.0000	0.0000	0.0000	0.0000
User Defined Retail	0	0.0000	0.0000	0.0000	0.0000		0.0000	0.0000		0.0000	0.0000	0.0000	0.0000	0.0000	0.0000	0.0000	0.0000
Total		**3.8000e-004**	**3.4700e-003**	**2.9200e-003**	**2.0000e-005**		**2.6000e-004**	**2.6000e-004**		**2.6000e-004**	**2.6000e-004**	**0.0000**	**3.7794**	**3.7794**	**7.0000e-005**	**7.0000e-005**	**3.8019**

5.3 Energy by Land Use - Electricity

Unmitigated

	Electricity Use	Total CO2	CH4	N2O	CO2e
Land Use	kWh/yr	MT/yr			
Automobile Care Center	44109	14.0541	5.8000e-004	1.2000e-004	14.1044
Other Asphalt Surfaces	0	0.0000	0.0000	0.0000	0.0000
User Defined Retail	147891	47.1213	1.9500e-003	4.0000e-004	47.2899
Total		**61.1754**	**2.5300e-003**	**5.2000e-004**	**61.3942**

Mitigated

	Electricity Use	Total CO2	CH4	N2O	CO2e
Land Use	kWh/yr	MT/yr			
Automobile Care Center	44109	14.0541	5.8000e-004	1.2000e-004	14.1044
Other Asphalt Surfaces	0	0.0000	0.0000	0.0000	0.0000
User Defined Retail	147891	47.1213	1.9500e-003	4.0000e-004	47.2899
Total		**61.1754**	**2.5300e-003**	**5.2000e-004**	**61.3942**

6.0 Area Detail

6.1 Mitigation Measures Area

	ROG	NOx	CO	SO2	Fugitive PM10	Exhaust PM10	PM10 Total	Fugitive PM2.5	Exhaust PM2.5	PM2.5 Total	Bio- CO2	NBio- CO2	Total CO2	CH4	N2O	CO2e
Category	tons/yr										MT/yr					
Mitigated	0.0318	0.0000	1.0000e-004	0.0000		0.0000	0.0000		0.0000	0.0000	0.0000	2.0000e-004	2.0000e-004	0.0000	0.0000	2.1000e-004
Unmitigated	0.0318	0.0000	1.0000e-004	0.0000		0.0000	0.0000		0.0000	0.0000	0.0000	2.0000e-004	2.0000e-004	0.0000	0.0000	2.1000e-004

6.2 Area by SubCategory

Unmitigated

	ROG	NOx	CO	SO2	Fugitive PM10	Exhaust PM10	PM10 Total	Fugitive PM2.5	Exhaust PM2.5	PM2.5 Total	Bio- CO2	NBio- CO2	Total CO2	CH4	N2O	CO2e
SubCategory	tons/yr										MT/yr					
Architectural Coating	3.8200e-003					0.0000	0.0000		0.0000	0.0000	0.0000	0.0000	0.0000	0.0000	0.0000	0.0000
Consumer Products	0.0280					0.0000	0.0000		0.0000	0.0000	0.0000	0.0000	0.0000	0.0000	0.0000	0.0000
Landscaping	1.0000e-005	0.0000	1.0000e-004	0.0000		0.0000	0.0000		0.0000	0.0000	0.0000	2.0000e-004	2.0000e-004	0.0000	0.0000	2.1000e-004
Total	**0.0318**	**0.0000**	**1.0000e-004**	**0.0000**		**0.0000**	**0.0000**		**0.0000**	**0.0000**	**0.0000**	**2.0000e-004**	**2.0000e-004**	**0.0000**	**0.0000**	**2.1000e-004**

6.2 Area by SubCategory

Mitigated

	ROG	NOx	CO	SO2	Fugitive PM10	Exhaust PM10	PM10 Total	Fugitive PM2.5	Exhaust PM2.5	PM2.5 Total	Bio- CO2	NBio- CO2	Total CO2	CH4	N2O	CO2e
SubCategory	tons/yr										MT/yr					
Architectural Coating	3.8200e-003					0.0000	0.0000		0.0000	0.0000	0.0000	0.0000	0.0000	0.0000	0.0000	0.0000
Consumer Products	0.0280					0.0000	0.0000		0.0000	0.0000	0.0000	0.0000	0.0000	0.0000	0.0000	0.0000
Landscaping	1.0000e-005	0.0000	1.0000e-004	0.0000		0.0000	0.0000		0.0000	0.0000	0.0000	2.0000e-004	2.0000e-004	0.0000	0.0000	2.1000e-004
Total	**0.0318**	**0.0000**	**1.0000e-004**	**0.0000**		**0.0000**	**0.0000**		**0.0000**	**0.0000**	**0.0000**	**2.0000e-004**	**2.0000e-004**	**0.0000**	**0.0000**	**2.1000e-004**

7.0 Water Detail

7.1 Mitigation Measures Water

Apply Water Conservation Strategy

	Total CO2	CH4	N2O	CO2e
Category	MT/yr			
Mitigated	17.0995	0.1196	2.9400e-003	20.9674
Unmitigated	21.1754	0.1495	3.6800e-003	26.0095

7.2 Water by Land Use

Unmitigated

	Indoor/Outdoor Use	Total CO2	CH4	N2O	CO2e
Land Use	Mgal	MT/yr			
Automobile Care Center	0.366916 / 0.224884	2.4347	0.0121	3.0000e-004	2.8260
Other Asphalt Surfaces	0 / 0	0.0000	0.0000	0.0000	0.0000
User Defined Retail	4.19628 / 0	18.7407	0.1375	3.3800e-003	23.1835
Total		**21.1754**	**0.1495**	**3.6800e-003**	**26.0095**

7.2 Water by Land Use

Mitigated

	Indoor/Outdoor Use	Total CO2	CH4	N2O	CO2e
Land Use	Mgal	MT/yr			
Automobile Care Center	0.293533 / 0.224884	2.1070	9.6500e-003	2.4000e-004	2.4206
Other Asphalt Surfaces	0 / 0	0.0000	0.0000	0.0000	0.0000
User Defined Retail	3.35702 / 0	14.9926	0.1100	2.7000e-003	18.5468
Total		**17.0995**	**0.1196**	**2.9400e-003**	**20.9674**

8.0 Waste Detail

8.1 Mitigation Measures Waste

Institute Recycling and Composting Services

Category/Year

	Total CO2	CH4	N2O	CO2e
	MT/yr			
Mitigated	3.0963	0.1830	0.0000	7.6709
Unmitigated	5.4320	0.3210	0.0000	13.4576

8.2 Waste by Land Use

Unmitigated

	Waste Disposed	Total CO2	CH4	N2O	CO2e
Land Use	tons	MT/yr			
Automobile Care Center	14.9	3.0246	0.1788	0.0000	7.4932
Other Asphalt Surfaces	0	0.0000	0.0000	0.0000	0.0000
User Defined Retail	11.86	2.4075	0.1423	0.0000	5.9644
Total		**5.4320**	**0.3210**	**0.0000**	**13.4576**

8.2 Waste by Land Use

Mitigated

	Waste Disposed	Total CO2	CH4	N2O	CO2e
Land Use	tons	MT/yr			
Automobile Care Center	8.493	1.7240	0.1019	0.0000	4.2711
Other Asphalt Surfaces	0	0.0000	0.0000	0.0000	0.0000
User Defined Retail	6.7602	1.3723	0.0811	0.0000	3.3997
Total		**3.0963**	**0.1830**	**0.0000**	**7.6709**

9.0 Operational Offroad

Equipment Type	Number	Hours/Day	Days/Year	Horse Power	Load Factor	Fuel Type

10.0 Stationary Equipment

Fire Pumps and Emergency Generators

Equipment Type	Number	Hours/Day	Hours/Year	Horse Power	Load Factor	Fuel Type

Boilers

Equipment Type	Number	Heat Input/Day	Heat Input/Year	Boiler Rating	Fuel Type

User Defined Equipment

Equipment Type	Number

11.0 Vegetation

	Total CO2	CH4	N2O	CO2e
Category	MT			
Unmitigated	21.9480	0.0000	0.0000	21.9480

11.1 Vegetation Land Change

Vegetation Type

	Initial/Final	Total CO2	CH4	N2O	CO2e
	Acres	MT			
Others	0 / 0	0.0000	0.0000	0.0000	0.0000
Total		**0.0000**	**0.0000**	**0.0000**	**0.0000**

11.2 Net New Trees

Species Class

	Number of Trees	Total CO2	CH4	N2O	CO2e
		MT			
Miscellaneous	31	21.9480	0.0000	0.0000	21.9480
Total		**21.9480**	**0.0000**	**0.0000**	**21.9480**

Lakewood Carwash

Los Angeles-South Coast County, Mitigation Report

Construction Mitigation Summary

Phase	ROG	NOx	CO	SO2	Exhaust PM10	Exhaust PM2.5	Bio- CO2	NBio-CO2	Total CO2	CH4	N2O	CO2e
Percent Reduction												
Architectural Coating	0.00	0.00	0.00	0.00	0.00	0.00	0.00	0.00	0.00	0.00	0.00	0.00
Building Construction	0.00	0.00	0.00	0.00	0.00	0.00	0.00	0.00	0.00	0.00	0.00	0.00
Demolition	0.00	0.00	0.00	0.00	0.00	0.00	0.00	0.00	0.00	0.00	0.00	0.00
Grading	0.00	0.00	0.00	0.00	0.00	0.00	0.00	0.00	0.00	0.00	0.00	0.00
Paving	0.00	0.00	0.00	0.00	0.00	0.00	0.00	0.00	0.00	0.00	0.00	0.00

OFFROAD Equipment Mitigation

Equipment Type	Fuel Type	Tier	Number Mitigated	Total Number of Equipment	DPF	Oxidation Catalyst
Air Compressors	Diesel	No Change	0	1	No Change	0.00
Cement and Mortar Mixers	Diesel	No Change	0	1	No Change	0.00
Concrete/Industrial Saws	Diesel	No Change	0	1	No Change	0.00
Cranes	Diesel	No Change	0	1	No Change	0.00
Forklifts	Diesel	No Change	0	1	No Change	0.00
Generator Sets	Diesel	No Change	0	1	No Change	0.00
Graders	Diesel	No Change	0	1	No Change	0.00
Pavers	Diesel	No Change	0	1	No Change	0.00
Paving Equipment	Diesel	No Change	0	1	No Change	0.00
Rollers	Diesel	No Change	0	1	No Change	0.00
Rubber Tired Dozers	Diesel	No Change	0	2	No Change	0.00
Tractors/Loaders/Backhoes	Diesel	No Change	0	6	No Change	0.00
Welders	Diesel	No Change	0	3	No Change	0.00

Equipment Type	ROG	NOx	CO	SO2	Exhaust PM10	Exhaust PM2.5	Bio- CO2	NBio- CO2	Total CO2	CH4	N2O	CO2e
	Unmitigated tons/yr						Unmitigated mt/yr					
Air Compressors	1.99000E-003	1.33700E-002	1.23600E-002	2.00000E-005	1.00000E-003	1.00000E-003	0.00000E+000	1.70217E+000	1.70217E+000	1.60000E-004	0.00000E+000	1.70622E+000
Cement and Mortar Mixers	2.90000E-004	1.84000E-003	1.54000E-003	0.00000E+000	7.00000E-005	7.00000E-005	0.00000E+000	2.29140E-001	2.29140E-001	2.00000E-005	0.00000E+000	2.29730E-001
Concrete/Industrial Saws	5.81000E-003	4.26100E-002	3.74900E-002	6.00000E-005	3.07000E-003	3.07000E-003	0.00000E+000	5.37656E+000	5.37656E+000	4.70000E-004	0.00000E+000	5.38839E+000
Cranes	3.24300E-002	3.85340E-001	1.38650E-001	2.90000E-004	1.71100E-002	1.57400E-002	0.00000E+000	2.66983E+001	2.66983E+001	8.20000E-003	0.00000E+000	2.69033E+001
Forklifts	1.03000E-002	8.94300E-002	6.21700E-002	8.00000E-005	7.35000E-003	6.76000E-003	0.00000E+000	7.07081E+000	7.07081E+000	2.17000E-003	0.00000E+000	7.12510E+000
Generator Sets	2.80200E-002	2.20580E-001	1.88480E-001	3.30000E-004	1.47300E-002	1.47300E-002	0.00000E+000	2.82604E+001	2.82604E+001	2.25000E-003	0.00000E+000	2.83166E+001
Graders	1.07000E-003	1.49400E-002	3.92000E-003	1.00000E-005	4.90000E-004	4.50000E-004	0.00000E+000	1.23605E+000	1.23605E+000	3.80000E-004	0.00000E+000	1.24552E+000
Pavers	1.63000E-003	1.80400E-002	1.46300E-002	2.00000E-005	8.80000E-004	8.10000E-004	0.00000E+000	2.14609E+000	2.14609E+000	6.70000E-004	0.00000E+000	2.16280E+000
Paving Equipment	1.19000E-003	1.32900E-002	1.26800E-002	2.00000E-005	6.50000E-004	6.00000E-004	0.00000E+000	1.85975E+000	1.85975E+000	5.80000E-004	0.00000E+000	1.87423E+000
Rollers	1.29000E-003	1.24700E-002	9.68000E-003	1.00000E-005	8.60000E-004	7.90000E-004	0.00000E+000	1.19706E+000	1.19706E+000	3.70000E-004	0.00000E+000	1.20638E+000
Rubber Tired Dozers	1.47700E-002	1.60400E-001	5.55200E-002	1.00000E-004	7.85000E-003	7.22000E-003	0.00000E+000	9.51416E+000	9.51416E+000	2.92000E-003	0.00000E+000	9.58703E+000
Tractors/Loaders/Backhoes	2.69300E-002	2.59640E-001	2.07550E-001	2.70000E-004	1.93800E-002	1.78300E-002	0.00000E+000	2.50568E+001	2.50568E+001	7.69000E-003	0.00000E+000	2.52492E+001
Welders	7.38000E-002	2.59790E-001	2.85690E-001	3.80000E-004	1.88500E-002	1.88500E-002	0.00000E+000	2.82331E+001	2.82331E+001	6.01000E-003	0.00000E+000	2.83833E+001

Equipment Type	ROG	NOx	CO	SO2	Exhaust PM10	Exhaust PM2.5	Bio- CO2	NBio- CO2	Total CO2	CH4	N2O	CO2e
	Mitigated tons/yr						Mitigated mt/yr					
Air Compressors	1.99000E-003	1.33700E-002	1.23600E-002	2.00000E-005	1.00000E-003	1.00000E-003	0.00000E+000	1.70217E+000	1.70217E+000	1.60000E-004	0.00000E+000	1.70621E+000
Cement and Mortar Mixers	2.90000E-004	1.84000E-003	1.54000E-003	0.00000E+000	7.00000E-005	7.00000E-005	0.00000E+000	2.29140E-001	2.29140E-001	2.00000E-005	0.00000E+000	2.29730E-001
Concrete/Industrial Saws	5.81000E-003	4.26100E-002	3.74900E-002	6.00000E-005	3.07000E-003	3.07000E-003	0.00000E+000	5.37656E+000	5.37656E+000	4.70000E-004	0.00000E+000	5.38838E+000
Cranes	3.24300E-002	3.85340E-001	1.38650E-001	2.90000E-004	1.71100E-002	1.57400E-002	0.00000E+000	2.66983E+001	2.66983E+001	8.20000E-003	0.00000E+000	2.69033E+001
Forklifts	1.03000E-002	8.94300E-002	6.21700E-002	8.00000E-005	7.35000E-003	6.76000E-003	0.00000E+000	7.07080E+000	7.07080E+000	2.17000E-003	0.00000E+000	7.12509E+000
Generator Sets	2.80200E-002	2.20580E-001	1.88480E-001	3.30000E-004	1.47300E-002	1.47300E-002	0.00000E+000	2.82603E+001	2.82603E+001	2.25000E-003	0.00000E+000	2.83166E+001
Graders	1.07000E-003	1.49400E-002	3.92000E-003	1.00000E-005	4.90000E-004	4.50000E-004	0.00000E+000	1.23605E+000	1.23605E+000	3.80000E-004	0.00000E+000	1.24552E+000
Pavers	1.63000E-003	1.80400E-002	1.46300E-002	2.00000E-005	8.80000E-004	8.10000E-004	0.00000E+000	2.14609E+000	2.14609E+000	6.70000E-004	0.00000E+000	2.16279E+000
Paving Equipment	1.19000E-003	1.32900E-002	1.26800E-002	2.00000E-005	6.50000E-004	6.00000E-004	0.00000E+000	1.85975E+000	1.85975E+000	5.80000E-004	0.00000E+000	1.87422E+000
Rollers	1.29000E-003	1.24700E-002	9.68000E-003	1.00000E-005	8.60000E-004	7.90000E-004	0.00000E+000	1.19706E+000	1.19706E+000	3.70000E-004	0.00000E+000	1.20637E+000
Rubber Tired Dozers	1.47700E-002	1.60400E-001	5.55200E-002	1.00000E-004	7.85000E-003	7.22000E-003	0.00000E+000	9.51414E+000	9.51414E+000	2.92000E-003	0.00000E+000	9.58702E+000
Tractors/Loaders/Backhoes	2.69300E-002	2.59640E-001	2.07550E-001	2.70000E-004	1.93800E-002	1.78300E-002	0.00000E+000	2.50568E+001	2.50568E+001	7.69000E-003	0.00000E+000	2.52492E+001
Welders	7.38000E-002	2.59790E-001	2.85690E-001	3.80000E-004	1.88500E-002	1.88500E-002	0.00000E+000	2.82331E+001	2.82331E+001	6.01000E-003	0.00000E+000	2.83832E+001

Equipment Type	ROG	NOx	CO	SO2	Exhaust PM10	Exhaust PM2.5	Bio- CO2	NBio- CO2	Total CO2	CH4	N2O	CO2e
Percent Reduction												
Air Compressors	0.00000E+000	0.00000E+000	0.00000E+000	0.00000E+000	0.00000E+000	0.00000E+000	0.00000E+000	0.00000E+000	0.00000E+000	0.00000E+000	0.00000E+000	5.86091E-006
Cement and Mortar Mixers	0.00000E+000	0.00000E+000	0.00000E+000	0.00000E+000	0.00000E+000	0.00000E+000	0.00000E+000	0.00000E+000	0.00000E+000	0.00000E+000	0.00000E+000	0.00000E+000
Concrete/Industrial Saws	0.00000E+000	0.00000E+000	0.00000E+000	0.00000E+000	0.00000E+000	0.00000E+000	0.00000E+000	0.00000E+000	0.00000E+000	0.00000E+000	0.00000E+000	1.85584E-006
Cranes	0.00000E+000	0.00000E+000	0.00000E+000	0.00000E+000	0.00000E+000	0.00000E+000	0.00000E+000	1.12367E-006	1.12367E-006	0.00000E+000	0.00000E+000	1.11510E-006
Forklifts	0.00000E+000	0.00000E+000	0.00000E+000	0.00000E+000	0.00000E+000	0.00000E+000	0.00000E+000	1.41427E-006	1.41427E-006	0.00000E+000	0.00000E+000	1.40349E-006
Generator Sets	0.00000E+000	0.00000E+000	0.00000E+000	0.00000E+000	0.00000E+000	0.00000E+000	0.00000E+000	1.06156E-006	1.06156E-006	0.00000E+000	0.00000E+000	1.41260E-006
Graders	0.00000E+000	0.00000E+000	0.00000E+000	0.00000E+000	0.00000E+000	0.00000E+000	0.00000E+000	0.00000E+000	0.00000E+000	0.00000E+000	0.00000E+000	0.00000E+000
Pavers	0.00000E+000	0.00000E+000	0.00000E+000	0.00000E+000	0.00000E+000	0.00000E+000	0.00000E+000	0.00000E+000	0.00000E+000	0.00000E+000	0.00000E+000	4.62364E-006
Paving Equipment	0.00000E+000	0.00000E+000	0.00000E+000	0.00000E+000	0.00000E+000	0.00000E+000	0.00000E+000	0.00000E+000	0.00000E+000	0.00000E+000	0.00000E+000	5.33552E-006
Rollers	0.00000E+000	0.00000E+000	0.00000E+000	0.00000E+000	0.00000E+000	0.00000E+000	0.00000E+000	0.00000E+000	0.00000E+000	0.00000E+000	0.00000E+000	8.28926E-006
Rubber Tired Dozers	0.00000E+000	0.00000E+000	0.00000E+000	0.00000E+000	0.00000E+000	0.00000E+000	0.00000E+000	2.10213E-006	2.10213E-006	0.00000E+000	0.00000E+000	1.04308E-006
Tractors/Loaders/Backhoes	0.00000E+000	0.00000E+000	0.00000E+000	0.00000E+000	0.00000E+000	0.00000E+000	0.00000E+000	1.19728E-006	1.19728E-006	0.00000E+000	0.00000E+000	1.18816E-006
Welders	0.00000E+000	0.00000E+000	0.00000E+000	0.00000E+000	0.00000E+000	0.00000E+000	0.00000E+000	1.06258E-006	1.06258E-006	0.00000E+000	0.00000E+000	1.05696E-006

Fugitive Dust Mitigation

Yes/No	Mitigation Measure	Mitigation Input		Mitigation Input		Mitigation Input	
No	Soil Stabilizer for unpaved Roads	PM10 Reduction	0.00	PM2.5 Reduction	0.00		
No	Replace Ground Cover of Area Disturbed	PM10 Reduction	0.00	PM2.5 Reduction	0.00		
Yes	Water Exposed Area	PM10 Reduction	61.00	PM2.5 Reduction	61.00	Frequency (per day)	3.00

No	Unpaved Road Mitigation	Moisture Content %	0.00	Vehicle Speed (mph)	0.00		
No	Clean Paved Road	% PM Reduction	0.00				

		Unmitigated		Mitigated		Percent Reduction	
Phase	Source	PM10	PM2.5	PM10	PM2.5	PM10	PM2.5
Architectural Coating	Fugitive Dust	0.00	0.00	0.00	0.00	0.00	0.00
Architectural Coating	Roads	0.00	0.00	0.00	0.00	0.00	0.00
Building Construction	Fugitive Dust	0.00	0.00	0.00	0.00	0.00	0.00
Building Construction	Roads	0.01	0.00	0.01	0.00	0.00	0.00
Demolition	Fugitive Dust	0.00	0.00	0.00	0.00	0.61	0.60
Demolition	Roads	0.00	0.00	0.00	0.00	0.00	0.00
Grading	Fugitive Dust	0.01	0.01	0.01	0.00	0.61	0.61
Grading	Roads	0.00	0.00	0.00	0.00	0.00	0.00
Paving	Fugitive Dust	0.00	0.00	0.00	0.00	0.00	0.00
Paving	Roads	0.00	0.00	0.00	0.00	0.00	0.00

Operational Percent Reduction Summary

Category	ROG	NOx	CO	SO2	Exhaust PM10	Exhaust PM2.5	Bio- CO2	NBio-CO2	Total CO2	CH4	N2O	CO2e
Percent Reduction												
Architectural Coating	0.00	0.00	0.00	0.00	0.00	0.00	0.00	0.00	0.00	0.00	0.00	0.00
Consumer Products	0.00	0.00	0.00	0.00	0.00	0.00	0.00	0.00	0.00	0.00	0.00	0.00
Electricity	0.00	0.00	0.00	0.00	0.00	0.00	0.00	0.00	0.00	0.00	0.00	0.00
Hearth	0.00	0.00	0.00	0.00	0.00	0.00	0.00	0.00	0.00	0.00	0.00	0.00
Landscaping	0.00	0.00	0.00	0.00	0.00	0.00	0.00	0.00	0.00	0.00	0.00	0.00
Mobile	0.00	0.00	0.00	0.00	0.00	0.00	0.00	0.00	0.00	0.00	0.00	0.00
Natural Gas	0.00	0.00	0.00	0.00	0.00	0.00	0.00	0.00	0.00	0.00	0.00	0.00
Water Indoor	0.00	0.00	0.00	0.00	0.00	0.00	20.00	19.19	19.25	19.99	20.11	19.39
Water Outdoor	0.00	0.00	0.00	0.00	0.00	0.00	0.00	0.00	0.00	0.00	0.00	0.00

Operational Mobile Mitigation

Project Setting:

Mitigation	Category	Measure	% Reduction	Input Value 1	Input Value 2	Input Value
No	Land Use	Increase Density	0.00			
No	Land Use	Increase Diversity	0.08	0.28		
No	Land Use	Improve Walkability Design	0.00			
No	Land Use	Improve Destination Accessibility	0.00			
No	Land Use	Increase Transit Accessibility	0.25			
No	Land Use	Integrate Below Market Rate Housing	0.00			
	Land Use	Land Use SubTotal	0.00			

No	Neighborhood Enhancements	Improve Pedestrian Network				
No	Neighborhood Enhancements	Provide Traffic Calming Measures				
No	Neighborhood Enhancements	Implement NEV Network	0.00			
	Neighborhood Enhancements	Neighborhood Enhancements Subtotal	0.00			
No	Parking Policy Pricing	Limit Parking Supply	0.00			
No	Parking Policy Pricing	Unbundle Parking Costs	0.00			
No	Parking Policy Pricing	On-street Market Pricing	0.00			
	Parking Policy Pricing	Parking Policy Pricing Subtotal	0.00			
No	Transit Improvements	Provide BRT System	0.00			
No	Transit Improvements	Expand Transit Network	0.00			
No	Transit Improvements	Increase Transit Frequency	0.00			
	Transit Improvements	Transit Improvements Subtotal	0.00			
		Land Use and Site Enhancement Subtotal	0.00			
No	Commute	Implement Trip Reduction Program				
No	Commute	Transit Subsidy				
No	Commute	Implement Employee Parking "Cash Out"				
No	Commute	Workplace Parking Charge				
No	Commute	Encourage Telecommuting and Alternative Work Schedules	0.00			
No	Commute	Market Commute Trip Reduction Option	0.00			
No	Commute	Employee Vanpool/Shuttle	0.00		2.00	
No	Commute	Provide Ride Sharing Program				
	Commute	Commute Subtotal	0.00			

No	School Trip	Implement School Bus Program	0.00			
		Total VMT Reduction	0.00			

Area Mitigation

Measure Implemented	Mitigation Measure	Input Value
No	Only Natural Gas Hearth	
No	No Hearth	
No	Use Low VOC Cleaning Supplies	
No	Use Low VOC Paint (Residential Interior)	50.00
No	Use Low VOC Paint (Residential Exterior)	50.00
No	Use Low VOC Paint (Non-residential Interior)	100.00
No	Use Low VOC Paint (Non-residential Exterior)	100.00
No	Use Low VOC Paint (Parking)	100.00
No	% Electric Lawnmower	
No	% Electric Leafblower	
No	% Electric Chainsaw	

Energy Mitigation Measures

Measure Implemented	Mitigation Measure	Input Value 1	Input Value 2
No	Exceed Title 24		
No	Install High Efficiency Lighting		
No	On-site Renewable		

Appliance Type	Land Use Subtype	% Improvement
ClothWasher		30.00
DishWasher		15.00
Fan		50.00
Refrigerator		15.00

Water Mitigation Measures

Measure Implemented	Mitigation Measure	Input Value 1	Input Value 2
Yes	Apply Water Conservation on Strategy	20.00	0.00
No	Use Reclaimed Water	0.00	0.00
No	Use Grey Water	0.00	
No	Install low-flow bathroom faucet	32.00	
No	Install low-flow Kitchen faucet	18.00	
No	Install low-flow Toilet	20.00	
No	Install low-flow Shower	20.00	
No	Turf Reduction	0.00	
No	Use Water Efficient Irrigation Systems	6.10	
No	Water Efficient Landscape	0.00	0.00

Solid Waste Mitigation

Mitigation Measures	Input Value

Institute Recycling and Composting Services Percent Reduction in Waste Disposed	43.00

APPENDIX “E”

Geotechnical Report

CHJ Consultants

A Terracon COMPANY

April 18, 2017

Parkcrest Development

2910 South Archibald Avenue, Suite A-350

Ontario, California 91761

Attention: Mr. Zac Henson

Job No. CB175122

Dear Mr. Henson:

This letter transmits six copies of the Geotechnical Investigation report prepared for the proposed automated car wash and auto repair center to be located at 6741 Carson Street, Lakewood, California.

We appreciate this opportunity to provide geotechnical services for this project. If you have questions or comments concerning this report, please contact us at your convenience.

Respectfully submitted,

CHJ CONSULTANTS, a Terracon Company

Fred Yi, Ph.D., G.E.
Chief Engineer

Distribution: Parkcrest Development (6)
Ms. Eliza Laws - email (eliza.laws@webbassociates.com)

GEOTECHNICAL INVESTIGATION
PROPOSED AUTOMATED CAR WASH AND AUTO REPAIR CENTER
6741 CARSON STREET
LAKEWOOD, CALIFORNIA
PREPARED FOR
PARKCREST DEVELOPMENT
JOB NO. CB175122

CHJ Consultants

A Terracon COMPANY

April 18, 2017

Parkcrest Development
2910 South Archibald Avenue, Suite A-350
Ontario, California 91761
Attention: Mr. Zac Henson

Job No. CB175122

Dear Mr. Henson:

Attached herewith is the Geotechnical Investigation report prepared for the proposed automated car wash and auto repair center to be located at 6741 Carson Street, Lakewood, California.

This report was based upon a scope of services generally outlined in our proposal, dated March 10, 2017, and other written and verbal communications.

We appreciate this opportunity to provide geotechnical services for this project. If you have questions or comments concerning this report, please contact this firm at your convenience.

Respectfully submitted,
CHJ CONSULTANTS, a Terracon Company

Fred Yi, Ph.D., G.E.
Chief Engineer

FY:lb

1355 E. Cooley Drive, Suite C •P.O. Box 1443 •Colton, CA 92324 • Phone (909) 824-7311 • Fax (909) 503-1136

TABLE OF APPENDICES

ENCLOSURE

APPENDIX "A" - MAPS

Index Map	"A-1"
Site Plan	"A-2"

APPENDIX "B" - EXPLORATORY LOGS

Key to Logs	"B" (1 of 2)
Soil Classification Chart	"B" (2 of 2)
Exploratory Boring Logs	"B-1"-"B-2"

APPENDIX "C" - LABORATORY TESTING

Particle Size Distribution (ASTM D6913)	"C-1"
Compaction Curves (ASTM D1557)	"C-2"
Consolidation Tests (ASTM D2435/4546)	"C-3"
Direct Shear Tests (ASTM D3080)	"C-4"-"C-5"
Test Data Summary	"C-6"
R-Value Test	"C-7"
R-Value by Expansion	"C-7a"
AC & PCC Structural Section Design	"C-8"
Corrosivity Test Results	"C-9"

APPENDIX "D" - GEOTECHNICAL CALCULATIONS

Seismic Settlement Potential - SPT Data	"D-1"
Earth Pressures	"D-2"

TABLE OF CONTENTS

PAGE

INTRODUCTION 1
SCOPE OF SERVICES 1
PROJECT CONSIDERATIONS 2
SITE DESCRIPTION 2
FIELD INVESTIGATION 3
LABORATORY INVESTIGATION 4
SITE GEOLOGY AND SUBSURFACE SOIL CONDITIONS 5
FAULTING 6
2016 CALIFORNIA BUILDING CODE - SEISMIC PARAMETERS 6
GROUNDWATER 7
LIQUEFACTION POTENTIAL AND SEISMIC SETTLEMENT 8
HYDROCONSOLIDATION 10
STATIC SETTLEMENT 11
EXPANSIVE SOILS 11
CONCLUSIONS 11
RECOMMENDATIONS 14
- General Site Grading 14
- Initial Site Preparation 14
- Minimum Mandatory Removal and Recompaction of Existing Soils 14
- Preparation of Fill Areas 15
- Preparation of Footing Areas 15
- Compacted Fills 16
- Foundation Design 16
- Lateral Loading 17
- Retaining Wall Backfill 18
- Seismic Lateral Earth Pressure 19
- Slabs-On-Grade 19
- Expansive Soils 20
- Potential Erosion and Drainage 21
- Chemical/Corrosivity Testing 21
- Preliminary Flexible Pavement Design 22
- Preliminary Rigid Pavement Design 23
- Pre-Job Conference 25
- Construction Observation 25

LIMITATIONS 25
CLOSURE 27
REFERENCES 28
LIST OF AERIAL IMAGERY 32

GEOTECHNICAL INVESTIGATION
PROPOSED AUTOMATED CAR WASH AND AUTO REPAIR CENTER
6741 CARSON STREET
LAKEWOOD, CALIFORNIA
PREPARED FOR
PARKCREST DEVELOPMENT
JOB NO. CB175122

INTRODUCTION

During March and April of 2017, a geotechnical investigation for the proposed automated car wash and auto repair center to be located at 6741 Carson Street, Lakewood, California, was performed by this firm. The purposes of this investigation were to explore and evaluate the geotechnical engineering conditions at the subject site and to provide appropriate geotechnical engineering recommendations for design and construction of the proposed facilities.

The approximate location of the site is shown on the attached Index Map (Enclosure "A-1"). To orient our investigation, a 16-scale site plan, prepared by SRK Architects, Inc., dated February 15, 2017, was furnished for our use and utilized as a base map for our Site Plan (Enclosure "A-2"). Google Earth imagery was also reviewed and helped to locate the site.

The results of our investigation, together with our conclusions and recommendations, are presented in this report.

SCOPE OF SERVICES

The scope of services provided during this geotechnical investigation included the following:

- Review of published and unpublished literature and maps
- A field reconnaissance of the site and surrounding area
- Logging and sampling of two exploratory borings for testing and evaluation
- Laboratory testing on selected samples

- Evaluation of the geotechnical engineering/geologic data to develop site-specific recommendations for site grading, foundation design and mitigation of potential geologic constraints

- Preparation of this report summarizing our findings, professional opinions and recommendations for the geotechnical aspects of project design and construction

PROJECT CONSIDERATIONS

Information furnished to this office indicates the approximately 48,440-square-foot site will be improved with an automated car wash and auto repair center. The site plan indicates that the subject project consists of a one-story car service structure with a footprint of approximately 3,900 square feet and a one-story car wash structure with a footprint of approximately 3,105 square feet. Improvements will include on-site pavement, as well as associated infrastructure. The proposed structures are anticipated to be of wood-frame and stucco construction or similar construction. Light to moderate foundations loads are anticipated.

A project grading plan was not available at the time of our investigation. However, observation of site topography and of adjacent developments indicates that development of this site will entail minimal cuts and fills. The final project grading plan should be reviewed by the geotechnical engineer in order to confirm that recommendations provided in this report have been implemented.

SITE DESCRIPTION

The subject site is located at 6741 Carson Street, between Ostrom Avenue and Los Coyotes Diagonal in the City of Lakewood, California. At the time of our investigation, the site contained an unoccupied commercial building and associated parking lots and planter areas. The site is relatively flat and planar. Residential structures are located to the west and north of the site. Commercial buildings are located to the east.

Historic aerial imagery dating back to 1952 was examined as part of this investigation. In the 1952 aerial image the site was developed with a commercial building in a different configuration than the present one. The areas to the north, south and east of the site were undeveloped while some residences were present to the west. The site remained relatively unchanged until the 1972 aerial image, when the parking lot north of the building was further developed. At this time the areas to the north and west of the site were further developed with residential structures, while the areas east of the site were developed with commercial buildings. By the time of the 1994 aerial image, the site was in its present configuration.

No evidence of faulting or other geologic hazards were observed during our investigation or on the aerial images examined.

FIELD INVESTIGATION

The soil conditions underlying the subject site were explored by means of two exploratory borings drilled to a maximum depth of 61-1/2 feet below the existing ground surface (bgs) with a truck-mounted CME 55 drill rig equipped for soil sampling. The approximate locations of our exploratory borings are indicated on the attached Site Plan (Enclosure"A-2").

Continuous logs of the subsurface conditions, as encountered within the exploratory borings, were recorded at the time of drilling by a staff geologist from this firm. Both a standard penetration test (SPT) sampler (2-inch outer diameter and 1-3/8-inch inner diameter) and a ring sampler (3-1/4-inch outer diameter and 2-3/8-inch inner diameter) were utilized in our investigation. The penetration resistance was recorded on the boring logs as the number of hammer blows used to advance the sampler in 6-inch increments (or less if noted). The samplers were driven with an automatic hammer that drops a 140-pound weight 30 inches for each blow. After the required seating, samplers are advanced up to 18 inches, providing up to three sets of blowcounts at each sampling interval. The recorded blows are raw numbers without any corrections for hammer type (automatic vs. manual cathead) or sampler size (ring sampler vs. SPT sampler). Both relatively undisturbed and bulk samples

of typical soil types obtained were returned to the laboratory in sealed containers for testing and evaluation.

Our exploratory boring logs, together with uncorrected blowcount data and in-place density data, are presented in Appendix "B". The stratification lines presented on the boring logs represent approximate boundaries between soil types, which may include gradual transitions.

At the completion of drilling, both borings were backfilled to the initial grade of the boring with soil boring cuttings and tamped using the drilling equipment augers and were patched with cold asphalt patch. This backfilling operation is expected to compact the boring to a density approximating that of the existing soils. If backfill material in addition to the excavated material was necessary to complete the backfill, then such material was secured and utilized in the backfilling operation. It is possible that some settlement of the backfilled material may occur. Our firm does not monitor boring locations for any settlement. This is deemed to be, and is accepted to be, the responsibility of our client. If the client observes settlement, then this firm should be notified.

LABORATORY INVESTIGATION

Included in our laboratory testing program were field moisture content tests on all samples returned to the laboratory and field dry density tests on all relatively undisturbed samples. The results are included on the boring logs. An optimum moisture content - maximum dry density relationship was established for a typical soil type in order to evaluate the relative compaction of the subsoils during construction. Direct shear testing was performed on a selected remolded sample in order to provide shear strength parameters for bearing capacity and earth pressure evaluations. A consolidation test was performed on a selected sample in order to provide parameters for settlement and hydroconsolidation evaluations. Sieve analyses and No. 200 washes were performed on selected samples of soil for classification purposes. Atterberg limits testing was performed on samples obtained at depths between 7 and 24-1/2 feet and between 35 and 50 feet in Exploratory Boring No. 2. Atterberg limit test results were not obtained due to the low plasticity of the samples.

A selected sample of material was delivered to HDR, Inc. for preliminary corrosivity analysis.

Laboratory test results appear in Appendix "C". Soil classifications provided in our geotechnical investigation are in general accordance with the Unified Soil Classification System (USCS).

SITE GEOLOGY AND SUBSURFACE SOIL CONDITIONS

Geologic mapping by Saucedo and others (2003) indicates that the site is underlain by young alluvial deposits of Holocene and late-Pleistocene age.

As encountered in the exploratory borings, the site is generally underlain by native loose to medium-dense, low-plasticity clayey silt (ML) to a maximum depth of approximately 24-1/2 feet bgs. The clayey silt layer is underlain by medium dense silty sand (SM), sandy silt (ML), low-plasticity silty clay (CL), and sandy silt (ML) layers to medium dense silty sand (SM). A dense to very dense silty sand (SM) layer was encountered at approximately 55 feet bgs.

Bedrock was not encountered in our exploratory borings to the maximum depth drilled (61-1/2 feet). Refusal to further advancement of the drilling augers was not experienced in the exploratory borings.

Groundwater was encountered in both of our exploratory borings at depths between 24-1/2 and 25 feet bgs.

Fill was encountered in Exploratory Boring No. 2 to a depth of 4 feet bgs. Localized areas of deeper fill may be encountered during grading.

Significant caving of the bore holes was not observed upon removal of the augers.

More detailed descriptions of the subsurface soil conditions encountered are presented on the attached boring logs (Appendix "B").

FAULTING

The site does not lie within or immediately adjacent to an Alquist-Priolo Earthquake Fault Zone designated by the State of California to include traces of suspected active faulting. The South Los Angeles Basin section of the Newport-Inglewood-Rose Canyon Fault Zone is located 3-3/4 miles southwest of the site and is the closest active fault zone to the site. No faults are shown as located on or adjacent to the site according regional geologic maps (Saucedo and others, 2003). The nearest fault to the site is the Los Alamitos fault, located approximately 1 mile to the southwest.

Based on the distance to the nearest active fault, we consider the potential for surface rupture at the site to be low.

2016 CALIFORNIA BUILDING CODE - SEISMIC PARAMETERS

Based on the geologic setting and anticipated earthwork for construction of the proposed project, the soils underlying the site are classified as Site Class "D, stiff soil profile", according to the 2016 California Building Code (CBC). The seismic parameters according to the 2016 CBC are summarized in the following table.

2016 CBC - Seismic Parameters	
Mapped Spectral Acceleration Parameters	S_S = 1.58 and S_1 = 0.57
Site Coefficients	F_a = 1.0 and F_v = 1.5
Adjusted Maximum Considered Earthquake Spectral Response Parameters	SM_S = 1.58 and SM_1 = 0.86
Design Spectral Acceleration Parameters	SD_S = 1.05 and SD_1 = 0.57
Peak Ground Acceleration	0.58g
De-aggregated Magnitude	6.51

GROUNDWATER

The site is located in Section 14 of Township 4 South, Range 12 West, in the Central Sub-basin of the Coastal Plain of Los Angeles Groundwater Basin. Depth to groundwater data in the vicinity of the site is available from the Los Angeles Department of Public Works and the State of California. Groundwater data is summarized in the following table.

Summary of Groundwater Data

Well No./ID	Date Measured	Depth to Water (feet)	Approximate Water Surface Elevation* (feet amsl)	Location of Well/Boring
04S12WA02	11/21/1961	109	-13	1/4 mile NW
	4/1/1998	48	-13	
	9/17/2009	115	-79	
1006H	2/28/1991	72	-34	575 feet SE
	4/1/1998	52	-14	
	9/17/2009	114	-76	
Contour Mapping				
Water Supply Paper 1471	1936	5	--	--
	1941	35	--	--

*Negative values indicate elevations below mean sea level.

Groundwater was encountered in Exploratory Boring No. 1 at a depth of 25 feet and in Exploratory Boring No. 2 at a depth of 24-1/2 feet. The State of California Seismic Hazard Zone Report for the Los Alamitos 7.5-Minute Quadrangle (1998) considers the historic high groundwater level to be 20 feet bgs. Based on available groundwater data a historic high groundwater of 20 feet bgs is estimated for the project.

LIQUEFACTION POTENTIAL AND SEISMIC SETTLEMENT

According to the City of Lakewood (2016), the site is located within an area identified as having a potential for liquefaction. The site is in a liquefaction hazard zone as designated by the State of California (1998).

Liquefaction is a process in which strong ground shaking causes saturated soils to lose their strength and behave as a fluid. Ground failure associated with liquefaction can result in severe damage to structures. The geologic conditions for increased susceptibility to liquefaction are: 1) shallow groundwater (generally less than 50 feet in depth), 2) the presence of unconsolidated sandy alluvium, typically Holocene in age, and 3) strong ground shaking. All three of these conditions must be present for liquefaction to occur.

Due to the potential for shallow groundwater beneath the site and the potential for strong ground shaking, the liquefaction potential of the site was evaluated based on the SPT data obtained and using the simplified procedure described by Seed and Idriss (1982), Seed and others (1985), modified in the 1996 National Center for Earthquake Engineering Research (NCEER) and 1998 NCEER/National Science Foundation (NSF) workshops (Youd and Idriss, 2001) and recently summarized by Idriss and Boulanger (2008). The method of evaluating liquefaction potential consists of comparing the cyclic stress ratio (CSR) developed in the soil by the earthquake motion to cyclic resistance ratio (CRR), which will cause liquefaction of the soil for a given number of cycles. In the simplified procedure, the CSR developed in the soil is calculated from a formula that incorporates ground surface acceleration, total and effective stresses in the soil at different depths (which in turn are related to the location of the groundwater table), non-rigidity of the soil column and a number of simplifying assumptions.

For sandy soils, the CRR that will cause liquefaction is related to the relative density of the soil, expressed in terms of SPT blowcounts $(N_1)_{60}$ (Seed and Idriss, 1982; Seed and others, 1985; Youd and Idriss, 2001; Idriss and Boulanger, 2008) normalized for an effective overburden pressure of 1 ton per square foot and corrected to equivalent clean sand resistance. For this investigation, SPT blowcounts

were obtained and utilized in the analysis. A historical high groundwater of 20 feet bgs was utilized to calculate the liquefaction potential in the area. The recommended peak ground acceleration of 0.58g and a deaggregated earthquake magnitude of 6.51 were utilized as input into the liquefaction analysis program GeoSuite, version 2.4 (Yi, 2017).

Seismic-induced settlement includes settlement that occurs both in dry sands and saturated sands (California Geological Survey, 2008). Severe seismic shaking may cause dry sands to densify, resulting in settlement expressed at the ground surface. Seismic settlement in dry soils generally occurs in loose sands and silty sands, with cohesive and fine-grained soils being less prone to significant settlement. For saturated soils, significant settlement is anticipated if the soils exhibit liquefaction during seismic shaking.

The methods for evaluating seismic settlement in saturated sands can generally be classified into two groups. The method for the first group was developed during the 1970s and 1980s, generally based on the relationship between cyclic stress ratio, $(N_1)_{60}$, and volumetric strain (Silver and Seed, 1971; Lee and Albaisa, 1974; and Tokimatsu and Seed, 1987). The method for the second group was developed in the early 1990s with the paper by Ishihara and Yoshimine (1992) as the first publication in the category, modified and improved by various researchers (Robertson and Wride, 1998; Yoshimine et al., 2006; Idriss and Boulanger, 2008), and is generally based on the relationship between volumetric strain and the factor of safety for liquefaction. Idriss and Boulanger (2008) modified the methods to incorporate both SPT and cone penetrometer test (CPT) data.

Research related to the estimation of dry sand settlement during earthquake excitation was initiated in the early 1970s by Silver and Seed (1971), followed by the works of several researchers (Seed and Silver, 1972; Pyke et al., 1975; Tokimatsu and Seed, 1987; and Pradel, 1998). A simplified method of evaluating earthquake-induced settlements in dry, sandy soils based on the Tokimatsu and Seed procedure has been developed by Pradel (1998) and is recommended by Martin and Lew (1999) as one of the standard methods for the estimation of earthquake-induced settlements of dry sands in California. All of these methods generally utilize SPT data.

The procedures and corrections summarized by Idriss and Boulanger (2008) were utilized to evaluate the liquefaction potential and seismic settlement of saturated sandy soils for SPT data. The seismic settlement of dry sands was evaluated based on the modified Pradel's method (Pradel, 1998). All of these methods were incorporated into a liquefaction and seismic settlement program, GeoSuite, version 2.4 (Yi, 2017).

A representative soil profile was generated utilizing the data from Exploratory Boring No. 2 (SPT test data). Liquefaction potential was evaluated for this soil profile using the historical high groundwater. Our calculations indicated that the site has slight liquefaction potential in layers at depths between 30 and 35 feet and between 50 and 55 feet. The results are included in Enclosure "D-1".

The potential for surface manifestation of liquefaction was evaluated utilizing both the liquefaction potential index (LPI) developed and presented by Iwasaki et al. (1978, 1982) and the liquefaction severity number (LSN) proposed by Tonlin & Taylor (2013). Both the LPI and LSN are shown in Enclosure "D-1" and indicate "low" or "little" surface manifestation risk.

Seismic settlement was estimated using the data from the same exploratory boring utilized in the liquefaction analyses. Results are shown in Enclosure "D-1". These results indicate total maximum seismic settlement of approximately 1 inch. Differential seismic settlement may be taken as one-half the total seismic settlement.

HYDROCONSOLIDATION

To evaluate the potential deformation that may be caused by the addition of water to subsurface soils, hydroconsolidation tests were performed on a selected, representative relatively undisturbed sample. The result is shown in Enclosure "C-3". Based on this test result, hydroconsolidation potential is considered to be insignificant.

STATIC SETTLEMENT

The potential for static settlement was evaluated utilizing field and laboratory data and foundation load assumptions. We anticipate a total static settlement of less than 1 inch beneath foundations. Differential static settlement is anticipated to be less than one-half the total static settlement across a distance of 40 feet. Most of the potential static settlement should occur during construction.

EXPANSIVE SOILS

Expansion index (EI) testing was performed to determine the expansion potential of clayey silt soils encountered in exploratory borings. The result is presented on Enclosure "C 6(2)") (Test Data Summary). The values of EI obtained (E.I.=47) indicate a "low" potential for expansion in accordance with the classification of ASTM D 4829. Hydroconsolidation testing performed on the same type of materials indicates 0.2 percent hydroconsolidation under pressure of 2,000 pounds per square foot (psf). In other words, soils tested behave as compressive rather than expansive when water is added. In addition, Atterberg limits testing indicates that the material encountered is of very low plasticity. Overall, it is the opinion of this firm that expansion potential is not a hazard to this site.

CONCLUSIONS

On the basis of our research and field and laboratory investigations, it is the opinion of this firm that the proposed project is feasible from geological and geotechnical engineering standpoints, provided the recommendations contained in this report are implemented during design and construction.

No evidence of active faulting was observed on or adjacent to the site. The site does not lie within or immediately adjacent to an Alquist-Priolo Earthquake Fault Zone designated by the State of California to include traces of suspected active faulting.

Moderate to severe seismic shaking of the site can be expected during the lifetime of the proposed project.

Groundwater was encountered in Exploratory Boring Nos. 1 and 2 at depths of 25 and 24-1/2 feet, respectively. Based on available groundwater data, a historic high groundwater of 20 feet bgs is estimated for the project.

As encountered in the exploratory borings, the site is generally underlain by native loose to medium-dense, low-plasticity clayey silt (ML) to a maximum depth of approximately 24-1/2 feet bgs. The clayey silt layer is underlain by medium dense silty sand (SM), sandy silt (ML), low-plasticity silty clay (CL), and sandy silt (ML) layers to medium dense silty sand (SM). A dense to very dense silty sand (SM) layer was encountered at approximately 55 feet bgs to the maximum depth attained.

Fill was encountered in Exploratory Boring No. 2 to a depth of 4 feet bgs. Localized areas of deeper fill may be encountered during grading.

Bedrock was not encountered in our exploratory borings to the maximum depth drilled (61-1/2 feet). Refusal to further advancement of the drilling augers was not experienced in the exploratory borings.

Groundwater was encountered in our exploratory borings at depths between 24-1/2 and 25 feet bgs.

Significant caving was not observed within the exploratory borings utilized for this investigation. However, trenches, larger-diameter borings or excavations that remain open for longer periods of time may be subject to caving.

Liquefaction may occur within deep local layers. Surface manifestation potential is "low" or "little". Maximum seismic settlement is estimated to be on the order of 1 inch. Maximum differential seismic settlement is anticipated to be on the order of 1/2 inch over 40 feet.

The potential for hydroconsolidation settlement at the site is considered to be low.

We anticipate a total of static and seismic settlement of less than 1-1/2 inches beneath foundations. Differential static settlement is anticipated to be less than 1 inch across a distance of 40 feet.

The result of expansion index testing indicates "low" expansion potential (EI = 47). Based on the overall test results (expansion index, hydroconsolidation and Atterberg limits), the expansive potential of the site is considered to be insignificant.

Based upon our field investigation and test data, it is our opinion that the upper existing soils will not, in their present condition, provide uniform or adequate support for the proposed structures. Based on review of our exploratory boring logs, variable in situ conditions may be present. These conditions may cause unacceptable differential and/or overall settlement upon application of the anticipated foundation loads.

Because of site conditions, it will be necessary to remove loose native soils and any undocumented fill encountered in the areas to be graded. To provide adequate support for the proposed structures, it is our recommendation that the building area be further subexcavated as necessary and recompacted to provide a compacted fill mat beneath footings and slabs. A compacted fill mat will provide a dense, uniform, high-strength soil layer to distribute the foundation loads over the underlying soils. Conventional spread foundations, either individual spread footings and/or continuous wall footings, may be utilized in conjunction with a compacted fill mat.

Based on the soil conditions encountered in exploratory borings placed within the site, site grading and utility trenching are expected to be feasible with conventional heavy grading and trenching equipment, respectively.

RECOMMENDATIONS

GENERAL SITE GRADING

It is imperative that no clearing and/or grading operations be performed without the presence of a representative of the geotechnical engineer. An on-site, pre-job meeting with the owner, the contractor and the geotechnical engineer should occur prior to all grading-related operations. Operations undertaken at the site without the geotechnical engineer present may result in exclusions of affected areas from the final compaction report for the project.

Grading of the subject site should be performed, at a minimum, in accordance with these recommendations and with applicable portions of the CBC. The following recommendations are presented for your assistance in establishing proper grading criteria.

INITIAL SITE PREPARATION

All areas to be graded should be stripped or cleaned of significant vegetation, any rocks greater than 8 inches in largest dimension and other deleterious materials. These materials should be removed from the site for disposal. The cleaned soils may be reused as properly compacted fill. If encountered, existing utility lines should be traced, removed and rerouted from areas to be graded.

MINIMUM MANDATORY REMOVAL AND RECOMPACTION OF EXISTING SOILS

In order to assist in the identification of undocumented fill, it is recommended that the upper 24 inches of soils be removed in all areas to be graded. All existing undocumented fill should then be completely removed. Further subexcavation may be necessary depending on the density. *In building areas, the removal should be at minimum to 5 feet bgs.* The open excavation bottoms should then be observed by our engineering geologist to verify and document in writing that all loose native soils or any undocumented fill is removed prior to refilling with properly tested and documented compacted fill. The removed soils may be cleaned and reused as compacted fill. The required overexcavation should extend at least 5 feet beyond the footing lines, where possible.

Further subexcavation may be necessary depending on the conditions of the underlying soils. The actual depth of removal should be determined at the time of grading by the project geotechnical engineer/geologist. The determination will be based on soil conditions exposed within the excavations.

Compaction tests may be taken in the removal bottom areas where appropriate to provide in-place moisture/density data for potential relative compaction evaluations and to help support and document the engineering geologist's decision. As such, all building pad areas should have any loose native soils, undocumented fill, topsoil or other unsuitable materials removed and replaced with properly compacted fill.

PREPARATION OF FILL AREAS

Prior to placing fill, and after the mandatory subexcavation operation with all loose native and undocumented fill removed, the surfaces of all areas to receive fill should be scarified to a depth of 12 inches or more. The scarified soils should be brought to near optimum moisture content and recompacted to a minimum relative compaction of 90 percent in accordance with ASTM D1557.

PREPARATION OF FOOTING AREAS

All footings should rest upon at least 36 inches of properly compacted fill material. In areas where the required thickness of compacted fill is not accomplished by site rough grading, mandatory subexcavation operation and undocumented fill removal, the footing areas should be further subexcavated. The required overexcavation should extend at least 5 feet laterally beyond the footing lines, where possible. The bottom of this excavation should then be scarified to a depth of at least 12 inches, brought to near optimum moisture content, and recompacted to a minimum of 90 percent relative compaction in accordance with ASTM D1557 prior to refilling the excavation to the required grade as properly compacted fill.

Foundation concrete should be placed in neat excavations with vertical sides, or the concrete should be formed and the excavations properly backfilled as recommended for compacted fill.

COMPACTED FILLS

The on-site soils should provide adequate quality fill material provided they are free from organic matter and other deleterious materials. Rocks or similar irreducible material with a maximum dimension greater than 8 inches should not be buried or placed in fills.

Import fill, if utilized, should be inorganic, non-expansive granular soils free from rocks or lumps greater than 6 inches in maximum dimension. The contractor shall notify the geotechnical engineer of import sources sufficiently ahead of their use so that the sources can be observed and approved as to the physical characteristic of the import material. For all import material, the contractor shall also submit current verified reports from a recognized analytical laboratory indicating that the import has a "not applicable" (Class S0) potential for sulfate attack based upon current ACI criteria and is "mildly corrosive" to ferrous metal and copper. The reports shall be accompanied by a written statement from the contractor that the laboratory test results are representative of all import material that will be brought to the job.

Fill should be spread in near-horizontal layers, approximately 8 inches thick. Thicker lifts may be approved by the geotechnical engineer if testing indicates that the grading procedures are adequate to achieve the required compaction. Each lift should be spread evenly, thoroughly mixed during spreading to attain uniformity of the material and moisture in each layer, brought to near optimum moisture content and compacted to a minimum relative compaction of 90 percent in accordance with ASTM D1557. Our experience on nearby projects with similar soil conditions indicates that proper mixing of the soils to obtain the desired moisture content is critical in obtaining the desired compaction.

FOUNDATION DESIGN

If the site is prepared as recommended, the proposed automated car wash and auto repair center may be safely founded on conventional spread foundations, either individual spread footings and/or continuous wall footings, bearing on a minimum of 12 inches of compacted fill. Footings should be a minimum of 24 inches wide and should be established at a minimum depth of 12 inches below lowest adjacent final subgrade level. For the minimum width and depth, footings may be designed for a

maximum safe soil bearing pressure of 1,500 psf for dead plus live loads. This allowable bearing pressure may be increased by 300 psf for each additional foot of width and by 900 psf for each additional foot of depth to a maximum safe soil bearing pressure of 2,700 psf for dead plus live loads. These bearing values may be increased by one-third for wind or seismic loading.

For footings thus designed up to the maximum allowable bearing capacity and constructed, we would anticipate a maximum static settlement of less than 1/2 inch. Differential settlement between similarly loaded adjacent footings is expected to be approximately half the total settlement.

LATERAL LOADING

Resistance to lateral loads will be provided by passive earth pressure and base friction. For footings bearing against compacted fill, passive earth pressure may be considered to be developed at a rate of 360 psf per foot of depth. Base friction may be computed at 0.36 times the normal load. Base friction and passive earth pressure may be combined without reduction.

Other than conservative soil modeling, the lateral passive earth pressure and base friction values recommended do not include factors of safety. If the design is to be based on allowable lateral resistance values, we recommend that minimum factors of safety of 1.5 and 2.0 be applied to the friction coefficient and passive lateral earth pressure, respectively. The resulting allowable lateral resistance values are:

Allowable Lateral Resistance Values			
	Ultimate	**Allowable**	**Factor of Safety**
Passive Lateral Earth Pressure (psf/ft)	360	180	2.0
Base Friction Coefficient	0.36	0.24	1.5

For preliminary retaining wall design, a lateral active earth pressure developed at a rate of 41 psf per foot of depth should be utilized for unrestrained conditions.

For restrained conditions, an at-rest earth pressure of 61 psf per foot of depth should be utilized.

The "at-rest" condition applies to braced walls that are not free to tilt. The "active" condition applies to unrestrained cantilevered walls where wall movement is anticipated. The structural designer should use judgment in determining the wall fixity and may utilize values interpolated between the "at-rest" and "active" conditions where appropriate.

These values are based on backfills with on-site materials compacted to at least 90 percent of relative compaction and should be verified prior to construction. These values are applicable only to level, properly drained backfill with no additional surcharge loadings and do not include a factor of safety other than conservative modeling of the soil strength parameters. *If inclined backfills are proposed, this firm should be contacted to develop appropriate active earth pressure parameters*. If import material is to be utilized for backfill, an engineer from this firm should verify the backfill has equivalent or superior strength values.

RETAINING WALL BACKFILL

Backfill behind retaining walls should consist of a soil of sufficient granularity that the backfill will properly drain. The granular soil should be classified per the USCS as GW, GP, SW, SP, SW-SM or SP-SM. Surface drainage should be provided to prevent ponding of water behind walls. A drainage system should be installed behind all retaining walls consisting of either or both of the following:

1. A 4-inch-diameter perforated PVC (Schedule 40) pipe or equivalent at the base of the stem encased in 2 cubic feet of granular drain material per linear foot of pipe or
2. Synthetic drains such as Enkadrain, Miradrain, Hydraway 300 or equivalent.

Perforations in the PVC pipe should be 3/8 inch in diameter and should be placed facing down. Granular drain material should be wrapped with filter cloth such as Mirafi 140 or equivalent to prevent clogging of the drains with fines. Walls should be waterproofed to prevent nuisance seepage and damage. Water should outlet to an approved drain.

SEISMIC LATERAL EARTH PRESSURE

The seismic earth pressure acting on a cantilevered retaining wall was calculated using the Mononobe-Okabe ("M-O") method (Okabe, 1926; Mononobe and Matsuo, 1929). AASHTO (LRFD Bridge Design Specifications, Fifth Edition, 2010, Section C11.8.6) recommends that the pseudostatic horizontal seismic coefficient (k_h) be taken equal to one-half of the PGA, which equates to 0.29g. The pseudostatic vertical seismic coefficient (k_v) is usually taken as one-half of k_h. For retaining walls with on-site soils as backfill materials, a unit weight of 122 pounds per cubic foot (pcf) and a friction angle of 30 degrees were utilized in the calculation. These values should be verified prior to construction when the backfill materials and conditions have been determined and are applicable only to level, properly drained backfill with no additional surcharge loadings.

The total lateral active seismic earth pressure (including static active earth pressure) developed at a rate of 68 psf per foot of depth should be utilized for unrestrained conditions. A triangular distribution of total seismic earth pressure should be used in the design (Atik and Sitar, 2010). Refer to Enclosure "D-2". The above lateral earth pressures are for level backfill. If inclined backfills are proposed, this firm should be contacted.

SLABS-ON-GRADE

To provide adequate support, concrete slabs-on-grade should bear on a minimum of 12 inches of compacted soil. Concrete slabs-on-grade should be a minimum of 4 inches in thickness. The soil should be compacted to 90 percent relative compaction. The final pad surfaces should be rolled to provide smooth, dense surfaces.

Slabs to receive moisture-sensitive coverings should be provided with a moisture vapor retarder/barrier. We recommend that a vapor retarder/barrier be designed and constructed according to the American Concrete Institute 302.1R, Concrete Floor and Slab Construction, which addresses moisture vapor retarder/barrier construction. At a minimum, the vapor retarder/barrier should comply with ASTM E1745 and have a nominal thickness of at least 10 mils. The vapor retarder/barrier should be properly sealed, per the manufacturer's recommendations, and protected from punctures and other damage. Per the Portland Cement Association (www.cement.org/tech/cct_con_vapor_retarders.asp), for slabs with vapor-sensitive coverings, a layer of dry, granular material (sand) should be placed ***under*** the vapor retarder/barrier. For slabs in humidity-controlled areas, a layer of dry, granular material (sand) should be placed ***above*** the vapor retarder/barrier.

EXPANSIVE SOILS

Clayey soil materials tested during this investigation exhibited a "low" but near "medium" potential for expansion with an EI of 47 in accordance with the classification of ASTM D 4829. Hydroconsolidation testing performed on the same type of materials indicates 0.2 percent hydroconsolidation under pressure of 2,000 psf, indicating compressive behavior when water is added. Additionally, Atterberg limits testing indicates that the material encountered is of very low plasticity. Overall, it is the opinion of this firm that expansion potential is not a hazard to this site.

Because of the potential for variability with respect to the grading operation and soil mixing, and the potential for importing of soils at the site, it is our recommendation that the grading operation be closely monitored by the geotechnical engineer, and, near the completion of grading, that building pad area be evaluated for expansive soils. The results of that evaluation will determine the specific type of slabs and foundations appropriate for the site's final graded condition.

POTENTIAL EROSION AND DRAINAGE

The potential for erosion of soil surfaces should be mitigated by proper drainage design. The site should be graded in such a way that surface water flows away from structures. Water should not be allowed to flow over graded areas or natural areas so as to cause erosion. Graded areas should be planted or otherwise protected from erosion by wind or water.

CHEMICAL/CORROSIVITY TESTING

Selected samples of materials were delivered to HDR, Inc. for preliminary soil corrosivity testing. Laboratory testing consisted of pH, resistivity and major soluble salts commonly found in soils. The results of the laboratory tests performed by HDR, Inc. appear in Enclosure "C-9".

These tests have been performed to screen the site for potentially corrosive soils. Values from the soil tested are considered potentially "moderately corrosive" to ferrous metals both at as-received condition and at saturated condition. Specific corrosion control measures, such as coating of the pipe with non-corrosive material or alternative non-metallic pipe material, will be needed.

Ammonium and nitrate levels did not indicate a concern as to corrosion of buried copper.

Results of the soluble sulfate testing indicate a "not applicable" (Class S0) anticipated exposure to sulfate attack. Based on the criteria from Table 4.3.1. of the American Concrete Institute "Manual of Concrete Practice" (2011), no special measures, such as specific cement types or water-cement ratios, will be needed for this "not applicable" exposure to sulfate attack.

The soluble chloride content of the soils tested was not at levels high enough to be of concern with respect to corrosion of reinforcing steel. The results should be considered in combination with the soluble chloride content of the hardened concrete in determining the effect of chloride on the corrosion of reinforcing steel.

CHJ Consultants, a Terracon Company, does not practice corrosion engineering. If further information concerning the corrosion characteristics, or interpretation of the results submitted herein, is required, then a competent corrosion engineer could be consulted.

PRELIMINARY FLEXIBLE PAVEMENT DESIGN

The following recommended structural sections were calculated based on traffic indices provided in the Caltrans "Highway Design Manual for Safety Roadside Rest Areas" (Caltrans, 2012). Based upon our preliminary sampling and testing, the structural sections tabulated below should provide satisfactory asphalt concrete pavement.

Usage	Traffic Index	R-Value	Recommended Structural Section
Auto Parking Areas	5.0	5	0.25' HMA/0.85' Class 2 AB
Auto Roads	5.5	5	0.25' HMA/1.00' Class 2 AB
Truck Parking Areas	6.0	5	0.30' HMA/1.05' Class 2 AB
Truck Ramps and Roads	8.0	5	0.40' HMA/1.50' Class 2 AB

HMA = hot mix asphalt AB = aggregate base

The above structural sections are predicated upon proper compaction of the utility trench backfills and the subgrade soils, with the upper 6 inches of subgrade soils and all aggregate base material brought to a minimum relative compaction of 95 percent in accordance with ASTM D1557 prior to paving. The aggregate base should meet Caltrans requirements for Class 2 base.

It should be noted that the above pavement designs were based upon the results of preliminary sampling and testing and should be verified by additional sampling and testing during construction when the actual subgrade soils are exposed.

CHJ Consultants does not practice traffic engineering. The traffic indices used to develop the recommended pavement sections are typical for projects of this type. We recommend that the project civil engineer or traffic engineer review the traffic indices to verify that they are appropriate for this project.

PRELIMINARY RIGID PAVEMENT DESIGN

Based on an R-value of 5, which correlates to a modulus of subgrade reaction of approximately 339 pounds per square inch per inch (k), we recommend the following Portland cement concrete pavement designs. This design is based on the American Concrete Institute "Guide for the Design and Construction of Concrete Parking Lots" (ACI 330R-08).

Design Area	Recommended Section
Car Parking and Access Lanes ADTT = 1 (Category A)	5.0" PCC*/Compacted Soil
Truck Parking Areas Multiple Units ADTT = 25 (Category B)	6.5" PCC*/Compacted Soil

ADTT = Average Daily Truck Traffic
* Rough-textured, angular-shaped aggregates

The above recommended concrete sections are based on a design life of 20 years, with integral curbs or thickened edges. In addition, the above structural sections are predicated upon proper compaction of the utility trench backfills and the subgrade soils, with the upper 12 inches of subgrade soils brought to a uniform relative compaction of 95 percent (ASTM 1557).

Slab edges that will be subject to vehicle loading should be thickened at least 2 inches at the outside edge and tapered to 36 inches back from the edge. Typical details are given in the ACI "Guide for Design and Construction of Concrete Parking Lots" (ACI 330R-08). Alternatively, slab edges subject to vehicle loading should be designed with dowels or other load transfer mechanism. Thickened edges or dowels are not necessary where new pavement will abut areas of curb and gutter, buildings or other structures preventing through-vehicle traffic and associated traffic loads.

The concrete sections may be placed directly over a compacted subgrade prepared as described above. The concrete to be utilized for the concrete pavement should have a minimum modulus of rupture of 550 pounds per square inch. This approximates a 28-day compressive strength of 3,650 pounds per square inch. However, the design strength should be based upon the modulus of rupture and not the compressive strength. Contraction joints should be sawcut in the pavement at maximum spacing of 30 times the thickness of the slab, up to a maximum of 15 feet. Sawcutting in the pavement should be performed within 12 hours of concrete placement, or preferably sooner.

Sawcut depths should be equal to approximately one-quarter of the slab thickness for conventional saws or 1 inch when early-entry saws are utilized on slabs 9 inches thick or less. The use of plastic strips for formation of jointing is not recommended. The use of expansion joints is not recommended, except where the pavement will adjoin structures. Construction joints should be constructed such that adjacent sections butt directly against each other and are keyed into each other or the joints are properly doweled with smooth dowels. It should be noted that distributed steel reinforcement (welded wire fabric) is not necessary, nor will any decrease in section thickness result from its inclusion.

The above pavement designs were based upon the results of preliminary sampling and testing and should be verified by additional sampling and testing during construction when the actual subgrade soils are exposed. CHJ Consultants does not practice traffic engineering. The ADTT figures used to develop the recommended PCC pavement sections are typical for projects of this type. We recommend the project civil engineer or traffic engineer verify that the ADTT figures used are appropriate for this project.

PRE-JOB CONFERENCE

It is imperative that no clearing and/or grading operations be performed without the presence of a representative of the geotechnical engineer. An on-site, pre-job meeting with the owner, the contractor and the geotechnical engineer should occur prior to all grading-related operations. It should be stressed that operations undertaken at the site without the presence of the geotechnical engineer may result in exclusions of affected areas from the final compaction report for the project.

CONSTRUCTION OBSERVATION

All grading operations, including site clearing and stripping, should be observed by a representative of the geotechnical engineer of this firm. The geotechnical engineer's field representative will be present to provide observation and field testing and will not supervise or direct any of the actual work of the contractor, his employees or agents. Neither the presence of the geotechnical engineer's field representative nor the observations and testing by the geotechnical engineer shall excuse the contractor in any way for defects discovered in his work. It is understood that the geotechnical engineer will not be responsible for job or site safety on this project, which will be the sole responsibility of the contractor.

LIMITATIONS

CHJ Consultants has striven to perform our services within the limits prescribed by our client, and in a manner consistent with the usual thoroughness and competence of reputable geotechnical engineers and engineering geologists practicing under similar circumstances. No other representation, express or implied, and no warranty or guarantee is included or intended by virtue of the services performed or reports, opinion, documents, or otherwise supplied.

This report reflects the testing conducted on the site as the site existed during the investigation, which is the subject of this report. However, changes in the conditions of a property can occur with the passage of time, due to natural processes or the works of man on this or adjacent properties. Changes in applicable or appropriate standards may also occur whether as a result of legislation, application or the broadening of knowledge. Therefore, this report is indicative of only those conditions tested at the time of the subject investigation, and the findings of this report may be invalidated fully or partially by changes outside of the control of CHJ Consultants. This report is therefore subject to review and should not be relied upon after a period of one year.

The conclusions and recommendations in this report are based upon observations performed and data collected at separate locations, and interpolation between these locations, carried out for the project and the scope of services described. It is assumed and expected that the conditions between locations observed and/or sampled are similar to those encountered at the individual locations where observation and sampling was performed. However, conditions between these locations may vary significantly. Should conditions that appear different than those described herein be encountered in the field by the client or any firm performing services for the client or the client's assign, this firm should be contacted immediately in order that we might evaluate their effect.

If this report or portions thereof are provided to contractors or included in specifications, it should be understood by all parties that they are provided for information only and should be used as such.

The report and its contents resulting from this investigation are not intended or represented to be suitable for reuse on extensions or modifications of the project, or for use on any other project.

CLOSURE

We appreciate this opportunity to be of service and trust this report provides the information desired at this time. Should questions arise, please do not hesitate to contact this firm at your convenience.

Respectfully submitted,

CHJ CONSULTANTS, a Terracon Company

V. John Romano, P.G. 9360
Project Geologist

John S. McKeown, E.G. 2396
Senior Geologist

Fred Yi, Ph.D., G.E. 2967
Chief Engineer

Robert J. Johnson, G.E. 446
Senior Principal

JR/JSM/FY/RJJ:lb

REFERENCES

American Concrete Institute, 2008, Guide for the Design and Construction of Concrete Parking Lots, ACI 330R-08.

American Concrete Institute, 2011, Manual of Concrete Practice, Part 3, Table 4.3.1.

Atik, L., and Sitar, N., 2010, Seismic Earth Pressures on Cantilever Retaining Structures, Journal of Geotechnical and Geoenvironmental Engineering, Volume 136, No. 10, October 1, 2010, Pages 1324-1333.

Boulanger, R. W., and Idriss, I. M., 2006, Liquefaction Susceptibility Criteria for Silts and Clays: American Society of Civil Engineers, Journal of the Geotechnical Engineering Division, v. 132, n. 11, 1413-1426.

Bray, J. D., and Sancio, R. B., 2006 , "Assessment of the Liquefaction Susceptibility of Find-Grained Soils", American Society of Civil Engineers, Journal of the Geotechnical and Geoenvironmental Engineering, v. 132, n. 9, p. 1165-1177.

California, State of, 1999, Seismic Hazard Zones Map, Los Alamitos Quadrangle, map dated March 25, 1999.

California Department of Water Resources, 1961, Planned Utilization of the Ground Water Basins of the Coastal Plain of Los Angeles County, Bulletin 104

California Geologic Survey, 1998, Seismic Hazard Zones Official Map for the Los Alamitos 7.5-minute quadrangle, Los Angeles County, California, Seismic Hazard Zone Report 019.

California Geological Survey, 2008, Guidelines for Evaluating and Mitigating Seismic Hazards in California, Special Publication 117A.

Caltrans, 2012, Highway Design Manual, Chapter 610, Pavement Engineering Considerations.

Coduto, Donald P., 2001, Foundation Design, Principles and Practices 2nd Edition, Prentice-Hall.

Coduto, D. P., Yeung, M. R., and Kitch, W. A., 2010, Geotechnical Engineering Principles and Practices, 2nd Edition, Pearson Higher Education, Inc., New Jersey.

Idriss, I. M., and Boulanger, R. W., 2008, "Soil Liquefaction During Earthquake", Earthquake Engineering Research Institute, EERI Publication MNO-12.

REFERENCES

International Conference of Building Officials, 2016, California Building Code, 2016 Edition: Whittier, California.

Lakewood, City of, Hazard Mitigation Plan, Draft, August 9, 2016.

Lee, K. L., and Albaisa, A., 1974, Earthquake induced settlements in saturated sands, J. Soil Mechanics and Foundations Div., ASCE 100(4), Pages 387-406.

Los Angeles County Department of Public Works, 2017, Groundwater Wells website, http://dpw.lacounty.gov/wrd/wellinfo/well.cfm.

Martin, G. R. and Lew, M., 1999, "Recommended Procedures for Implementation of DMG Special Publication 117 Guidelines for Analyzing and Mitigating Liquefaction Hazards in California", Southern California Earthquake Center, University of Southern California.

Mononobe, N., and Matsuo, H., 1929, "On the determination of earth pressures during earthquakes". Proceedings World Engineering Congress, Volume 9.

Okabe, S., 1926, "General theory of earth pressure," Japan Society of Civil Engineers, Volume 12, No. 1, Tokyo.

Poland, J.F., 1959, Hydrology of the Long Beach-Santa Ana Area, California, U.S. Geological Survey Water Supply Paper 1471.

Pradel, D., 1998, "Procedure to Evaluate Earthquake-Induced Settlement in Dry Sand Soils", Journal of Geotechnical and Geoenvironmental Engineering, Vol. 124, No. 4.

Pyke, R., Seed, H. B., Chan, C. K., 1975, "Settlement of sands under multidirectional shaking", J. Geotech. Engrg., ASCE, 101 (4), Pages 379-398.

Robertson, P. K., 2009, "Interpretation of Cone Penetration Tests - a unified approach", Canadian Geotechnical Journal, 2009, 46(11): 1337-1355.

Robertson, P. K., and Wride, C. E., 1998, "Evaluating cyclic liquefaction potential using the cone penetration test", Canadian Geotechnical Journal, 35: 442-459.

Saucedo, G. J., Greene, H. G., Kennedy, M. P., and Bezore, S. P., 2003, Geologic Map of the Long Beach 30x60 Quad, U.S. Geological Survey Regional Geologic Map Series No. 5.

REFERENCES

Seed, H. B., and Idriss, I. M., 1982, Ground motions and soil liquefaction during earthquakes: Earthquake Engineering Research Institute, Monograph Series, Monograph No. 5.

Seed, H. B., and Silver, M. L., 1972, "Settlement of dry sands during earthquakes," J. Soil. Mechanics and Foundations Div., ASCE, 98 (4), Pages 381-397.

Seed, H. B., Tokimatsu, K., Harder, L. F., and Chung, R. M., 1985, Influence of SPT procedures in soil liquefaction resistance evaluations: Journal of Geotechnical Engineering, ASCE, Volume III, No. 12.

Silver, M. L., and Seed, H. B., 1971, Volume changes in sand during cyclic loading, J. Soil Mechanics and Foundations Div., ASCE 97(SM9), Pages 1171-182.

Tokimatsu, K., and Seed, H. B., 1987, "Evaluation of Settlements in Sands Due to Earthquake Shaking", Journal of Geotechnical Engineering, Vol. 113, No. 8.

U.S. Geological Survey, 2014, U.S. Seismic Design Map web-based software application; http://earthquake.usgs.gov/designmaps/us/application.php, accessed November 2015.

Yi, F., 2010a, "Case Studies of CPT Interpretation and the Application in Seismic Settlement Evaluation", The 2nd International Symposium on Cone Penetration Testing, Huntington Beach, California, May 9-11, 2010.

Yi, F., 2010b, "Procedure to Evaluate Seismic Settlement Based on Shear Wave Velocity - Part I, Saturated Sands", The 9th U.S. National and 10th Canadian Conference on Earthquake Engineering (9USN/10CCEE), Toronto, Canada, July 25-29, 2010.

Yi, F., 2010c, "Procedure to Evaluate Seismic Settlement Based on Shear Wave Velocity - Part II, Unsaturated Sands", The 9th U.S. National and 10th Canadian Conference on Earthquake Engineering (9USN/10CCEE), Toronto, Canada, July 25-29, 2010.

Yi, F., 2017, "GeoSuite version 2.4.0.5", GeoAdvanced.

Yi, F., 2017, "LabSuite version 4.0.4.8", GeoAdvanced.

Yoshimine, M., Nishizaki, H., Amano, K., and Hosono, Y., 2006, Flow deformation of liquefied sand under constant shear load and its application to analysis of flow slide in infinite slope, Soil Dynamics and Earthquake Eng. 26, Pages 253-264.

REFERENCES

Youd, T. L., and Idriss, I. M., 2001, "Liquefaction Resistance of Soil: Summary Report from the 1996 NCEER and 1998 NCEER/NSF Workshops on Evaluation of Liquefaction Resistance of Soils", Journal of Geotechnical and Geoenvironmental Engineering, Vol. 127, No. 10.

Zhang, G., Robertson, P. K., and Brachman, R. W. I., 2002, "Estimating liquefaction-induced ground settlements from CPT for level ground" Canadian Geotechnical Journal, Ottawa, 39: 1168-1180.

LIST OF AERIAL IMAGERY

Google Earth, 2016, web-based software application, aerial imagery dated May 30, 1994; June 10, 2002; March 8, 2003; August 23, 2005; July 30, 2007; May 24, 2009; March 7, 2011; December 30, 2013; and February 2, 2016.

Nationwide Environmental Title Research, LLC (NETR), accessed 2016, http://www.historicaerials.com/ web-based software application; imagery dated 1952, 1953, 1963, 1972, 1994, 2005, 2009, 2010 and 2012.

APPENDIX "A"

MAPS

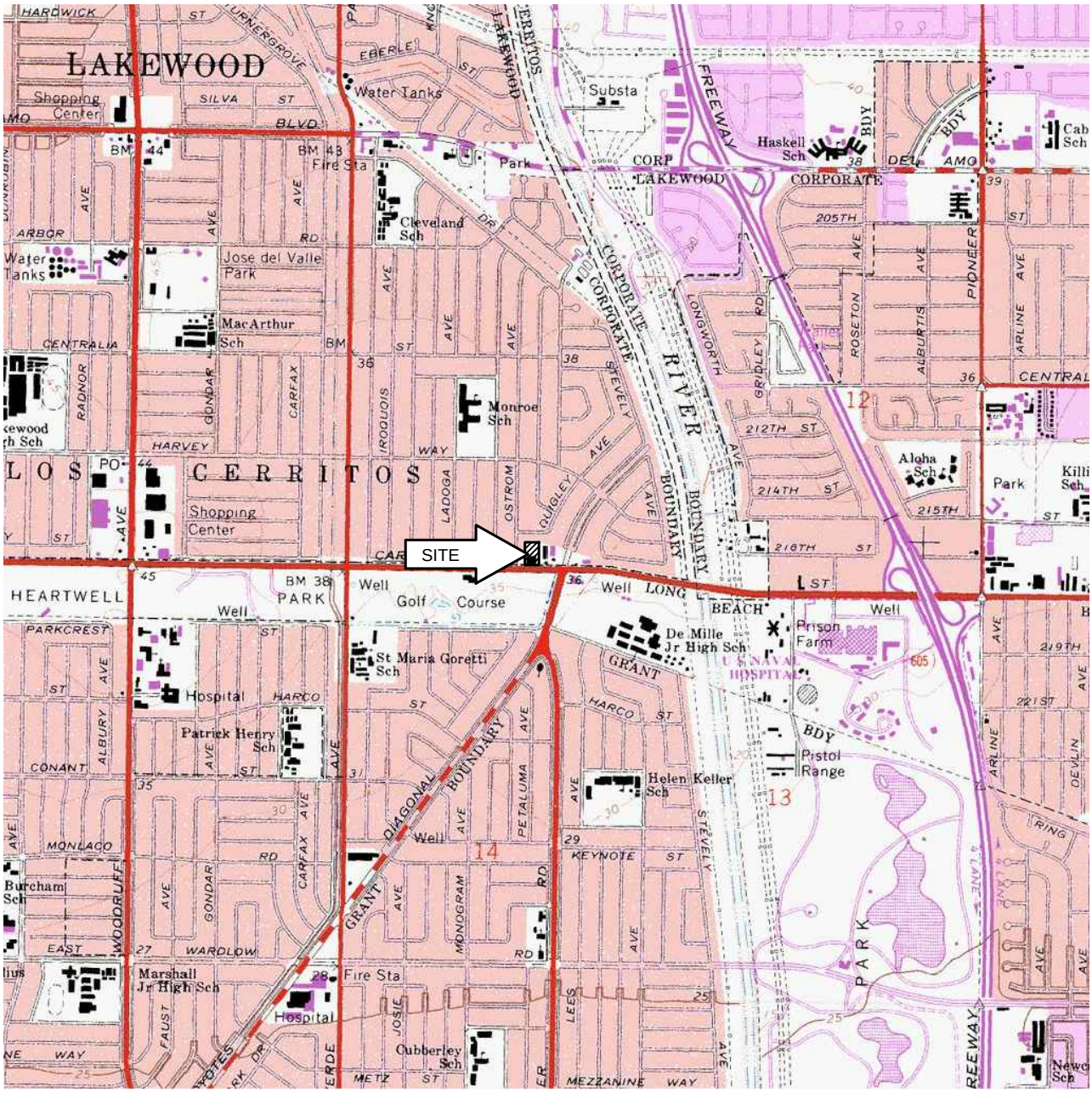

N

SCALE: 1" = 2000'

INDEX MAP

FOR: PARKCREST DEVELOPMENT	GEOTECHNICAL INVESTIGATION PROPOSED AUTOMATED CAR WASH AND AUTO REPAIR CENTER 6741 CARSON STREET LAKEWOOD, CALIFORNIA	ENCLOSURE "A-1"
DATE: APRIL 2017		JOB NUMBER CB175122

Terracon

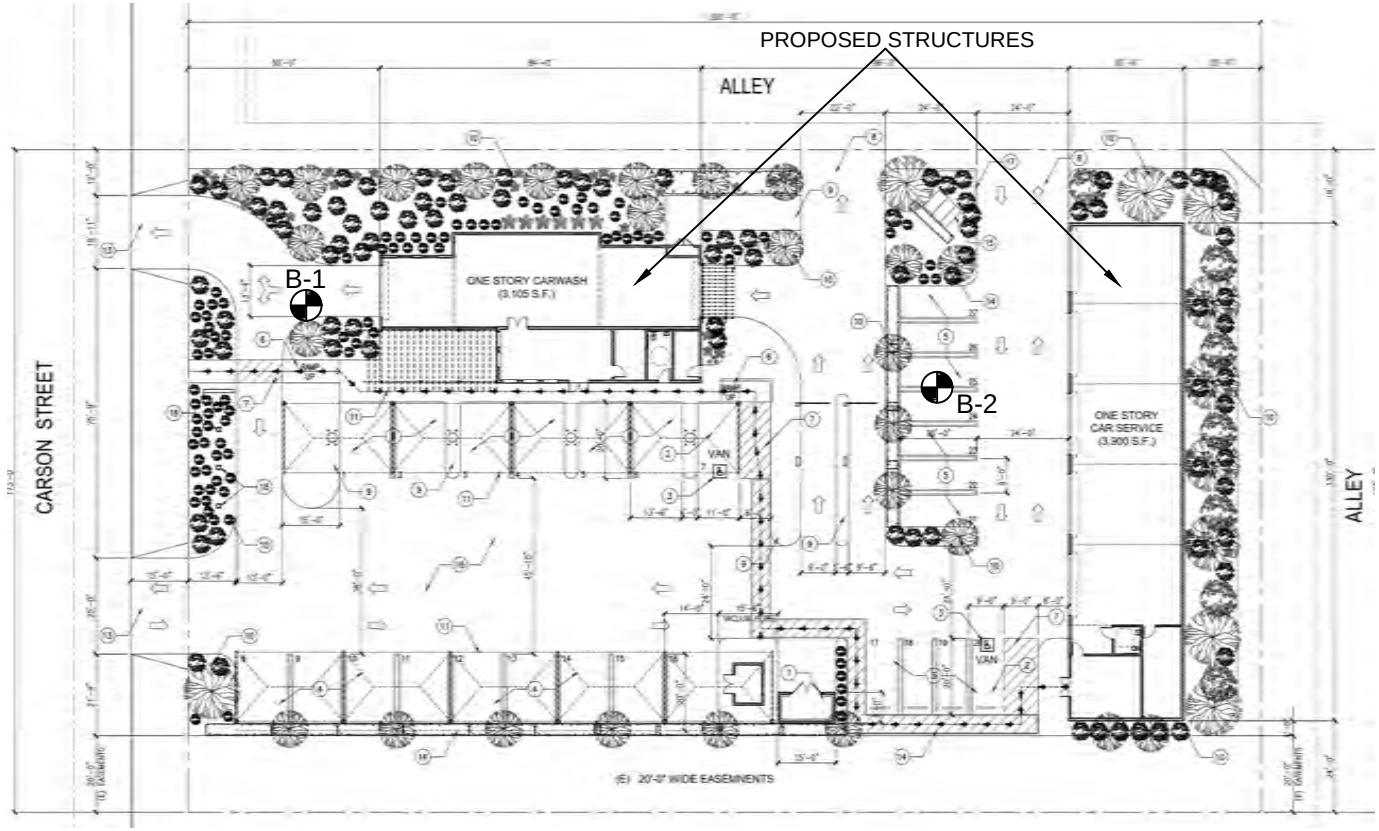

SRK
STEWART
ROMBERGER
KITE
SRK ARCHITECTS INC.

2254 S. Figueroa St.
Los Angeles, CA 90007
p: 213.747.1199

www.srkarchitectsinc.com

AUTOMATED CAR WASH
AND
AUTO REPAIR CENTER

6741 CARSON STREET
LAKEWOOD, CA.

© 2017 SRK ARCHITECTS, INC.
ALL DRAWINGS AND WRITTEN MATERIAL APPEARING HEREIN CONSTITUTE THE ORIGINAL AND UNPUBLISHED WORK OF SRK ARCHITECTS, INC. AND THE SAME MAY NOT BE DUPLICATED, USED, OR DISCLOSED WITHOUT THE WRITTEN CONSENT OF SRK ARCHITECTS, INC.

LICENSED ARCHITECT
BRIAN A. KITE
C-11258
RENEWAL DATE: 08/31/17
STATE OF CALIFORNIA

Issue	Description	Date
	CITY OF LAKEWOOD CUP SUBMITTAL	02/15/17

Drawn: MT Check: BK Owner Approval:

Job No: 16024.00 Scale: AS NOTED

Title: SITE PLAN

N

SCALE: 1" = 50'

0 50 100

LEGEND:

B-2 EXPLORATORY BORING

SITE PLAN

FOR: PARKCREST DEVELOPMENT

DATE: APRIL 2017

GEOTECHNICAL INVESTIGATION
PROPOSED AUTOMATED CAR WASH AND
AUTO REPAIR CENTER
6741 CARSON STREET
LAKEWOOD, CALIFORNIA

ENCLOSURE "A-2"

JOB NUMBER CB175122

Terracon

APPENDIX "B"

EXPLORATORY LOGS

Enclosure "B" (1 of 2)
Job No. CB175122

KEY TO LOGS

LEGEND OF LAB/FIELD TESTS:

Blows	A measure of the penetration resistance of soil expressed as the number of hammer blows required to advance the indicated sampler 6 inches (or less if noted). Samplers are driven with an automatic hammer that drops a 140-pound weight 30 inches for each blow. After the required seating, samplers are advanced up to 18 inches ahead of the boring, providing up to three sets of blows per drive.
Bulk	Indicates Disturbed or Bulk Sample
Consol.	Consolidation Test (ASTM D2435)
Cor.	Chemical/Corrosivity Tests (ASTM G187, D4327, D4972)
DS	Direct Shear Test (ASTM D3080)
Exp.	Expansion Index Test (California Building Code Standard Test Method 18-2)
Hydro.	Hydrometer Analysis (ASTM D422)
MDC	Maximum Density Optimum Moisture Test (ASTM D1557)
Pass #200	Washed through #200 Screen (ASTM D422)
PI	Plasticity Index
Ring	Indicates Relatively Undisturbed Ring Sample. The number of blows per 6 inches required to drive a "California Sampler" (3-1/4" O.D. and 2-3/8" I.D.) 18 inches using a 140-pound weight falling 30 inches was recorded.
RV	R-Value Test (CT 301)
SA	Sieve Analysis (ASTM D422)
SE	Sand Equivalent Test (ASTM D2419)
SPT	Indicates Standard Penetration Test. The number of blows per 6 inches required to drive an unlined SPT sampler (2" O.D. and 1-3/8" I.D). 18 inches using a 140-pound weight falling 30 inches was recorded.

Terracon

Enclosure "B" (2 of 2)
Job No. CB175122

UNIFIED SOIL CLASSIFICATION SYSTEM

UNIFIED SOIL CLASSIFICATION AND SYMBOL CHART

COARSE-GRAINED SOILS (more than 50% of material is larger than No. 200 sieve size)			
GRAVELS More than 50% of coarse fraction larger than No.4 sieve size	Clean Gravels (Less than 5% fines)	GW	Well-graded gravels, gravel-sand mixtures, little or no fines
		GP	Poorly-graded gravels, gravel-sand mixtures, little or no fines
	Gravels with fines (More than 12% fines)	GM	Silty gravels, gravel-sand-silt mixtures
		GC	Clayey gravels, gravel-sand-clay mixtures
SANDS 50% or more of coarse fraction smaller than No.4 sieve size	Clean Sands (Less than 5% fines)	SW	Well-graded sands, gravelly sands, little or no fines
		SP	Poorly graded sands, gravelly sands, little or no fines
	Sands with fines (More than 12% fines)	SM	Silty sands, sand-silt mixtures
		SC	Clayey sands, sand-clay mixtures
FINE-GRAINED SOILS (50% or more of material is smaller than No. 200 sieve size)			
SILTS AND CLAYS Liquid limit less than 50%		ML	Inorganic silts and very fine sands, rock flour, silty of clayey fine sands or clayey silts with slight plasticity
		CL	Inorganic clays of low to medium plasticity, gravelly clays, sandy clays, silty clays, lean clays
		OL	Organic silts and organic silty clays of low plasticity
SILTS AND CLAYS Liquid limit 50% or greater		MH	Inorganic silts, micaceous or diatomaceous fine sandy or silty soils, elastic silts
		CH	Inorganic clays of high plasticity, fat clays
		OH	Organic clays of medium to high plasticity, organic silts
HIGHLY ORGANIC SOILS		PT	Peat and other highly organic soils

LABORATORY CLASSIFICATION CRITERIA

GW $C_u = \frac{D_{60}}{D_{10}}$ greater than 4; $C_c = \frac{D_{30}^2}{D_{10} \times D_{60}}$ between 1 and 3

GP Not meeting all gradation requirements for GW

GM	Atterberg limits below "A" line or P.I. less than 4	Above "A" line with P.I. between 4 and 7 are borderline cases requiring use of dual symbols.
GC	Atterberg limits above "A" line with P.I. greater than 7	

SW $C_u = \frac{D_{60}}{D_{10}}$ greater than 6; $C_c = \frac{D_{30}^2}{D_{10} \times D_{60}}$ between 1 and 3

SP Not meeting all gradation requirements for SW

SM	Atterberg limits below "A" line or P.I. less than 4	Limits plotting in shaded zone with P.I. between 4 and 7 are borderline cases requiring use of dual symbols.
SC	Atterberg limits above "A" line with P.I. greater than 7	

Determine percentages of sand and gravel from grain-size curve. Depending on percentage of fines (fraction smaller than No. 200 sieve size).
Coarse-grained soils are classified as follows:
Less than 5 percent.....GW, GP, SW, SP
More than 12 percent.....GM, GC, SM, SC
5 to 12 percent.....Borderline cases requiring dual symbols

PLASTICITY CHART

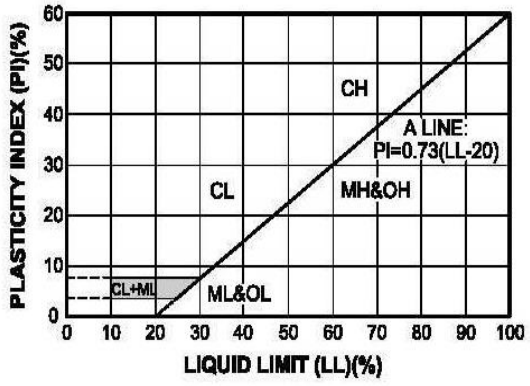

EXPLORATORY BORING NO. 1

Date Drilled: 3/27/17

Client: Parkcrest Development

Equipment: CME55 Truck Rig

Driving Weight / Drop / Sampler Size: 140lbs./30in./3.25" O.D.

Surface Elevation(ft): N/A

Logged by: GA

Measured Depth to Water(ft): 25.0

DEPTH (ft)	VISUAL CLASSIFICATION	REMARKS	SAMPLES: DRIVE	SAMPLES: BULK	BLOWS/6 IN.	FIELD MOISTURE (%)	DRY UNIT WT. (pcf)	LAB/FIELD TESTS
	Asphalt Concrete, 5"							
	Aggregate Base, 10"							
	(ML) Sandy Silt, fine, with clay, dark olive brown	Native	X		6 8 9	17.1	104	Ring
				▨		19.7		Cor., Exp., MDC, RV, SA, SE
5	(ML) Clayey Silt, with sand, fine, dark olive brown		X		5 7 9	21.2	105	Consol., DS, Ring
10	(SM) Silty Sand, fine, olive brown		X		4 5 7	20.3	90	Ring
15			X		6 7 7	19.9	100	Ring
20	(CL) Silty Clay, with sand, fine, olive brown		X		3 5 7	31.0	97	Ring
				▨		27.3		
25	(SM) Silty Sand, fine, grayish brown	▼ Groundwater	X		9 11 14	21.3	104	Ring
30	(CL) Silty Clay, with sand, fine, bluish gray		X		4 7 9	25.9	105	Ring
	END OF BORING NO REFUSAL, NO BEDROCK NO CAVING, NO FILL GROUNDWATER AT 25'							

10331-3 17122-3.GPJ CHJ.GDT 4/18/17

CHJ

PROPOSED AUTOMATED CAR WASH & AUTO REPAIR CENTER
6741 CARSON STREET, LAKEWOOD, CALIFORNIA

Job No. CB175122

Enclosure B-1

EXPLORATORY BORING NO. 2

Date Drilled: 3/27/17

Client: Parkcrest Development

Equipment: CME55 Truck Rig

Driving Weight / Drop / Sampler Size: 140lbs./30in./2.0" O.D.

Surface Elevation(ft): N/A

Logged by: GA

Measured Depth to Water(ft): 24.5

DEPTH (ft)	GRAPHIC LOG	VISUAL CLASSIFICATION	REMARKS	SAMPLES: DRIVE	SAMPLES: BULK	BLOWS/6 IN.	FIELD MOISTURE (%)	DRY UNIT WT. (pcf)	LAB/FIELD TESTS
		Asphalt Concrete, 3"							
		Aggregate Base, 5"	Fill						
		(ML) Clayey Silt, with sand, fine, very dark gray							
		(ML) Clayey Silt, with sand, fine, dark olive	Native		▨		21.5		Cor., Exp., MDC, RV, SA, SE SPT
5				☒		2 3 3			
					▨		25.0		
10				☒		2 3 5			Hydro., PI, SPT
15				☒		2 3 4			Hydro., PI, SPT
20				☒		3 2 4			Hydro., PI, SPT
25		(SM) Silty Sand, fine, dark olive	▼ Groundwater	☒		4 6 8			Pass #200, SPT
30		(ML) Sandy Silt, fine, dark olive		☒		2 4 5			Pass #200, SPT

10331-3 17122-3.GPJ CHJ.GDT 4/18/17

CHJ

PROPOSED AUTOMATED CAR WASH & AUTO REPAIR CENTER
6741 CARSON STREET, LAKEWOOD, CALIFORNIA

Job No. CB175122

Enclosure B-2a

EXPLORATORY BORING NO. 2

Date Drilled: 3/27/17

Client: Parkcrest Development

Equipment: CME55 Truck Rig

Driving Weight / Drop / Sampler Size: 140lbs./30in./2.0" O.D.

Surface Elevation(ft): N/A

Logged by: GA

Measured Depth to Water(ft): 24.5

DEPTH (ft)	GRAPHIC LOG	VISUAL CLASSIFICATION	REMARKS	SAMPLES DRIVE	SAMPLES BULK	BLOWS/6 IN.	FIELD MOISTURE (%)	DRY UNIT WT. (pcf)	LAB/FIELD TESTS
		(CL) Silty Clay, with sand, fine, olive gray		X		2 4 6			Hydro., PI, SPT
40				X		3 5 6			Hydro., PI, SPT
45				X		4 6 7			Hydro., PI, SPT
50		(ML) Clayey Silt, with sand, fine, bluish gray		X		5 8 8			Pass #200, SPT
55		(SM) Silty Sand, fine, bluish gray		X		6 13 15			Pass #200, SPT
60				X		7 12 13			Pass #200, SPT
		END OF BORING							
65		NO REFUSAL, NO BEDROCK NO CAVING, FILL TO 4' GROUNDWATER AT 24.5'							

10331-3 17122-3.GPJ CHJ.GDT 4/18/17

CHJ

PROPOSED AUTOMATED CAR WASH & AUTO REPAIR CENTER
6741 CARSON STREET, LAKEWOOD, CALIFORNIA

Job No. CB175122

Enclosure B-2b

APPENDIX "C"

LABORATORY TESTING

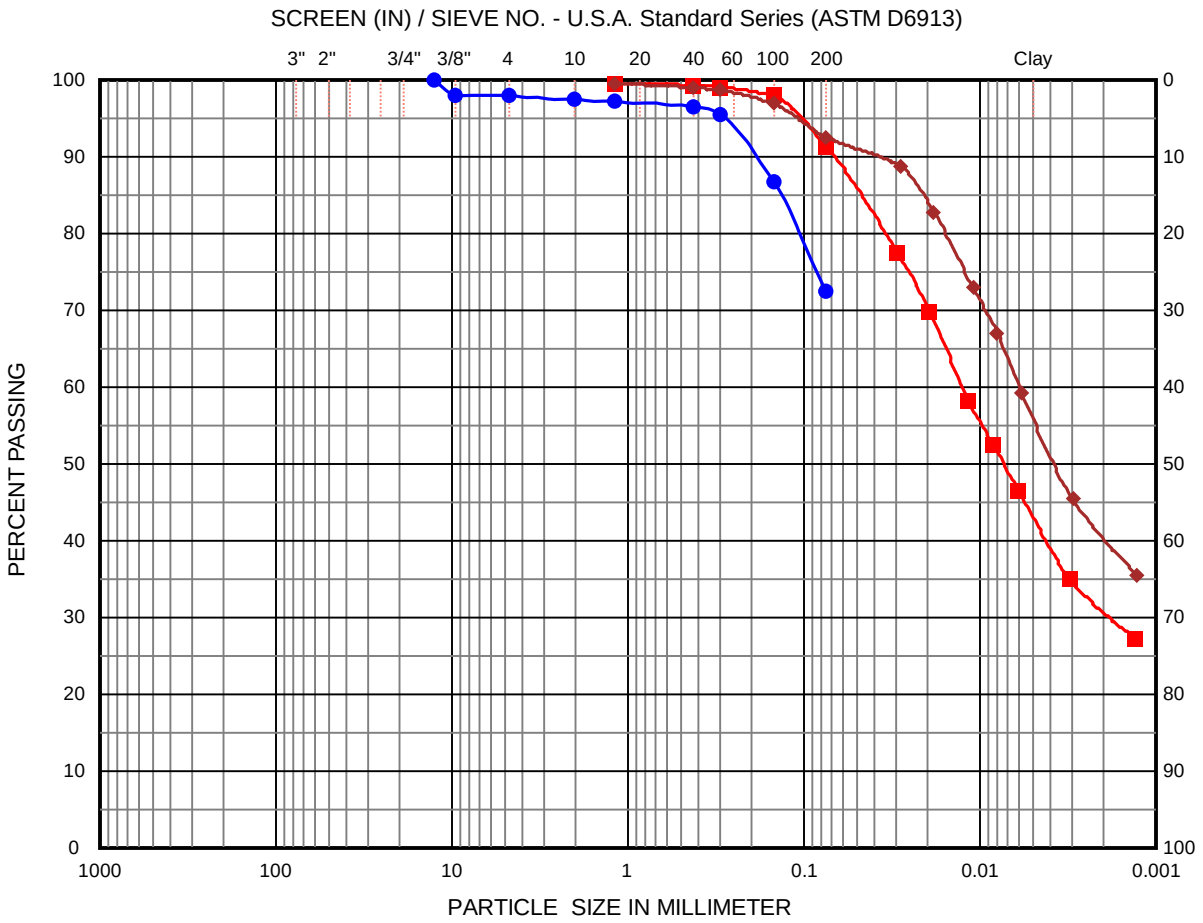

Cobbles & Boulders	Gravel		Sand			Silt	Clay
	Coarse	Fine	Coarse	Medium	Fine		

	Sample No.	Gravel	Sand	Fines	Clay	D_{10}	D_{30}	D_{50}	D_{60}	C_u	C_c
●	1A+2A (2 - 4 ft)	2.1	25.5	72.4							
	(ML) Sandy Silt, fine (SE=3)										
■	2-3 to 2-5 (7 - 24.5 ft)		8.6	91.4	43.1		0.002	0.007	0.013		
	(ML) Clayey Silt, fine										
◆	2-8 to 2-10 (35 - 50 ft)		7.4	92.6	55.8			0.004	0.006		
	(CL) Silty clay, fine										

Terracon

PARTICLE SIZE DISTRIBUTION (ASTM D6913)

Project:	Proposed Automated Car Wash and Auto Repair Center				
Location:	6741 Carson Street, Lakewood, California				
Job Number:	CB175122	Engineer:	fy	Enclosure:	C-1

G:\2017\17122-3 Parkcrest, Car Wash & Aut Repair Ctr\Lab\LabSuite_17122-3.csv

LabSuite© Version 4.0.4.8. Developed by Fred Yi, PhD, PE, GE Copyright© 2002 - 2017 GeoAdvanced™. All rights reserved _Commercial Copy
Prepared at 4/17/2017 2:10:51 PM

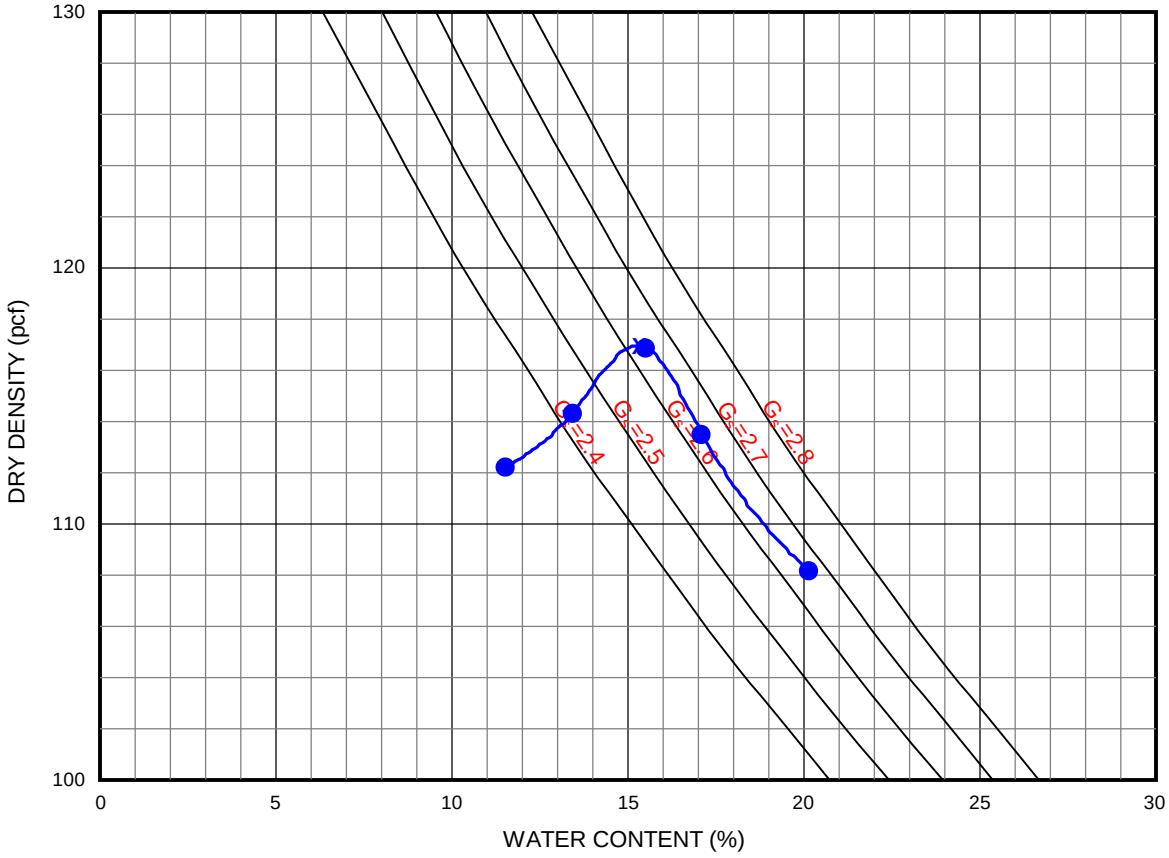

	Sample No.	USCS Classification	γ_{dmax} (pcf)	w_o (%)
●	1A+2A (2 - 4 ft)	(ML) Clayey Silt, fine	117.0	15.0

COMPACTION CURVES (ASTM D1557)					
Project:	Proposed Automated Car Wash and Auto Repair Center				
Location:	6741 Carson Street, Lakewood, California				
Job Number:	CB175122	Engineer:	fy	Enclosure:	C-2

G:\2017\17122-3 Parkcrest, Car Wash & Aut Repair Ctr\Lab\LabSuite_17122-3.csv
LabSuite© Version 4.0.4.8. Developed by Fred Yi, PhD, PE, GE Copyright© 2002 - 2017 GeoAdvanced™. All rights reserved _Commercial Copy Prepared at 4/17/2017 2:10:51 PM

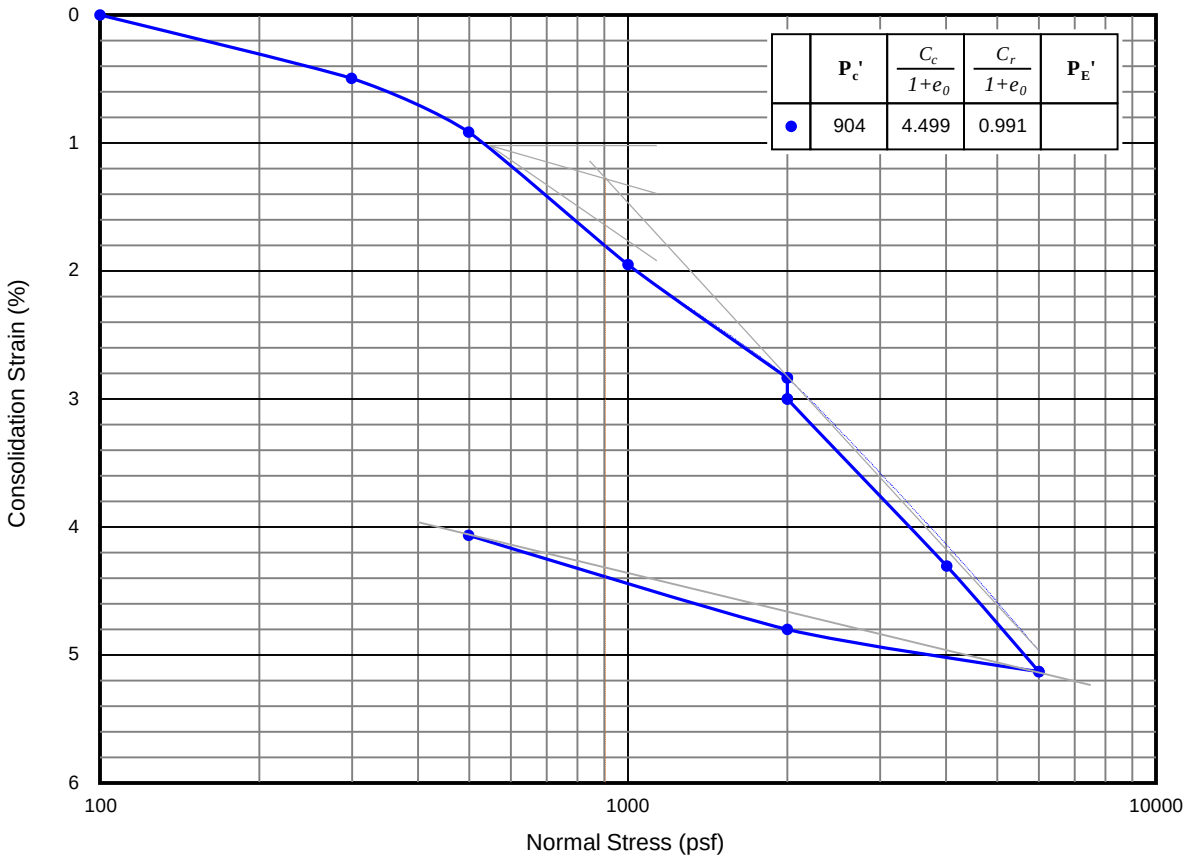

	Boring No.	Depth (ft)	USCS Classification	γ_d (pcf)	w (%)	HCS (%)
●	1	5	(ML) Clayey silt, fine with sand	105.1	21.2	0.2

CONSOLIDATION TESTS (ASTM D2435/4546)

Project:	Proposed Automated Car Wash and Auto Repair Center				
Location:	6741 Carson Street, Lakewood, California				
Job Number:	CB175122	Engineer:	fy	Enclosure:	C-3

G:\2017\17122-3 Parkcrest, Car Wash & Aut Repair Ctr\Lab\LabSuite_17122-3.csv

LabSuite© Version 4.0.4.8. Developed by Fred Yi, PhD, PE, GE Copyright© 2002 - 2017 GeoAdvanced™. All rights reserved _Commercial Copy
Prepared at 4/17/2017 2:10:51 PM

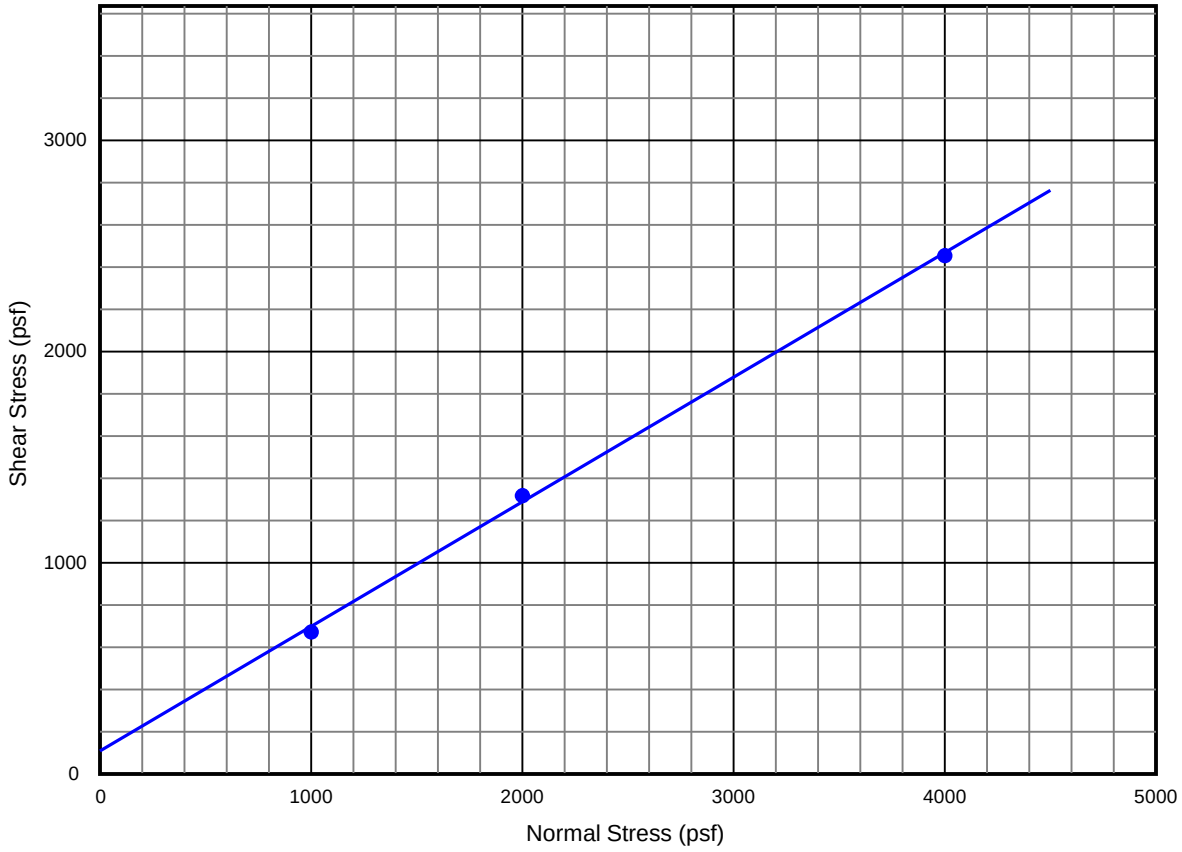

	Boring No.	Depth (ft)	γ_d (pcf)	w (%)	C_{pk} (psf)	ϕ_{pk} (°)	C_{rs} (psf)	ϕ_{rs} (°)
●	1	5	105.1	21.2	404.5	31.2	105.0	30.6
	(ML) Clayey silt, fine with sand							

DIRECT SHEAR TESTS (ASTM D3080)					
Project:	Proposed Automated Car Wash and Auto Repair Center				
Location:	6741 Carson Street, Lakewood, California				
Job Number:	CB175122	Engineer:	fy	Enclosure:	C-4

G:\2017\17122-3 Parkcrest, Car Wash & Aut Repair Ctr\Lab\LabSuite_17122-3.csv

LabSuite© Version 4.0.4.8. Developed by Fred Yi, PhD, PE, GE Copyright© 2002 - 2017 GeoAdvanced™. All rights reserved _Commercial Copy
Prepared at 4/17/2017 2:10:51 PM

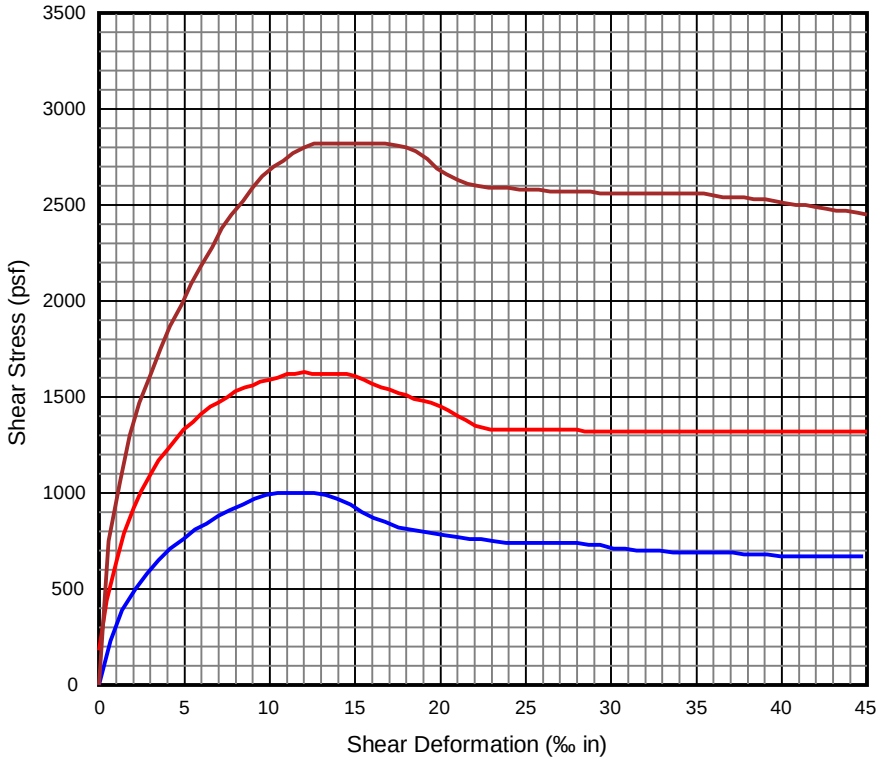

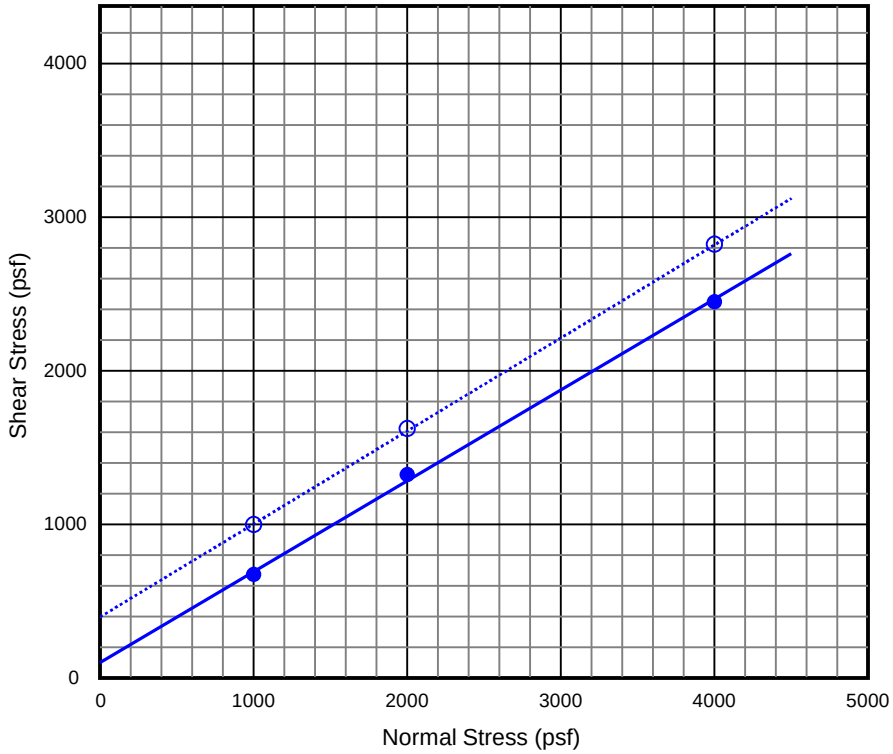

	Boring No.	Depth (ft)	USCS	γ_d (pcf)	w (%)	C_{pk} (psf)	ϕ_{pk} (°)	C_{rs} (psf)	ϕ_{rs} (°)
●	1	5	(ML) Clayey silt, fine with sand	105.1	21.2	404.5	31.2	105.0	30.6

CHJ Consultants
A Terracon COMPANY

DIRECT SHEAR TESTS (ASTM D3080)

Project:	Proposed Automated Car Wash and Auto Repair Center				
Location:	6741 Carson Street, Lakewood, California				
Job Number:	CB175122	Engineer:	fy	Enclosure:	C-5

G:\2017\17122-3 Parkcrest, Car Wash & Aut Repair Ctr\Lab\LabSuite_17122-3.csv

LabSuite© Version 4.0.4.8. Developed by Fred Yi, PhD, PE, GE
Copyright© 2002 - 2017 GeoAdvanced™. All rights reserved _Commercial Copy
Prepared at 4/17/2017 2:10:51 PM

CONSOLIDATION TESTS (ASTM D2435/4546)

Boring No.	Depth (ft)	USCS	γ_d (pcf)	w (%)	Pc' (psf)
1	5	ML	105.1	21.2	904
Boring No.	**$C_c/(1+e_0)$(%)**	**$C_r/(1+e_0)$(%)**	**PE' (psf)**	**HCS (%)**	
1	4.499	0.991		0.2	

DIRECT SHEAR TESTS (ASTM D3080)

Boring No.	Depth (ft)	USCS	γ_d (pcf)	w (%)	C_{pk} (psf)	ϕ_{pk} (°)	C_{rs} (psf)	ϕ_{rs} (°)
1	5	ML	105.1	21.2	404.5	31.2	105.0	30.6

FINES CONTENT (ASTM D1140)

Boring No.	2	2	2	2	2
Depth (ft)	24.5 - 30	30 - 35	50 - 55	55 - 60	60 - 62
Original Dry Mass	489.8	329.1	321.8	306.8	328.6
Dry Mass after Washing	373.7	87.8	132.2	221.5	206.9
Fine Contents (%)	23.7	73.3	58.9	27.8	37.0
Classification	SM	ML	ML	SM	SM

COMPACTION CURVES (ASTM D1557)

Sample No.	Depth (ft)	USCS	γ_{dmax} (pcf)	w_o (%)
1A+2A	2 - 4	ML	117.0	15.0

Terracon

TEST DATA SUMMARY

Project:	Proposed Automated Car Wash and Auto Repair Center				
Location:	6741 Carson Street, Lakewood, California				
Job Number:	CB175122	Engineer:	fy	Enclosure:	C-6(1)

G:\2017\17122-3 Parkcrest, Car Wash & Aut Repair Ctr\Lab\LabSuite_17122-3.csv

LabSuite© Version 4.0.4.8. Developed by Fred Yi, PhD, PE, GE Copyright© 2002 - 2017 GeoAdvanced™. All rights reserved _Commercial Copy Prepared at 4/17/2017 2:10:51 PM

R-VALUE (CALTRANS 301)

Sample No.	1A+2A
Depth (ft)	3
Classification	ML
Sand Equivalent	3
R-value	5

EXPANSION INDEX (ASTM D 4829)

Sample No.	1A+2A
Depth (ft)	3
Initial Moisture (%)	11.9
Final Moisture (%)	25.1
Degree of Saturation (%)	51
Expansion Index	47
Expansion Potential	Low

G:\2017\17122-3 Parkcrest, Car Wash & Aut Repair Ctr\Lab\LabSuite_17122-3.csv

Terracon

TEST DATA SUMMARY

Project:	Proposed Automated Car Wash and Auto Repair Center				
Location:	6741 Carson Street, Lakewood, California				
Job Number:	CB175122	Engineer:	fy	Enclosure:	C-6(2)

LabSuite© Version 4.0.4.8. Developed by Fred Yi, PhD, PE, GE Copyright© 2002 - 2017 GeoAdvanced™. All rights reserved _Commercial Copy

Traffic Index (T.I.) 5.0	A	B	C	D
COMPACTOR AIR PRESSURE P.S.I.	25	75	200	
INITIAL MOISTURE %	19.9	19.9	19.9	
WATER ADDED, ML	0	-10	-20	
WATER ADDED %	0.0	-1.2	-2.3	
MOISTURE AT COMPACTION %	19.9	18.7	17.6	
HEIGHT OF BRIQUETTE	2.48	2.50	2.50	
WET WEIGHT OF BRIQUETTE	1037	1041	1040	
DENSITY LB. PER CU.FT.	105.7	106.2	107.2	
STABILOMETER PH AT 1000 LBS.	88	78	70	
2000 LBS.	151	138	117	
DISPLACEMENT	5.50	5.30	5.00	
R-VALUE	3	7	16	
EXUDATION PRESSURE	130	360	510	
THICK. INDICATED BY STAB.	1.56	1.49	1.35	
EXPANSION PRESSURE	0	10	20	
THICK. INDICATED BY E.P.	0.00	0.33	0.67	

EXUDATION CHART

R-VALUE

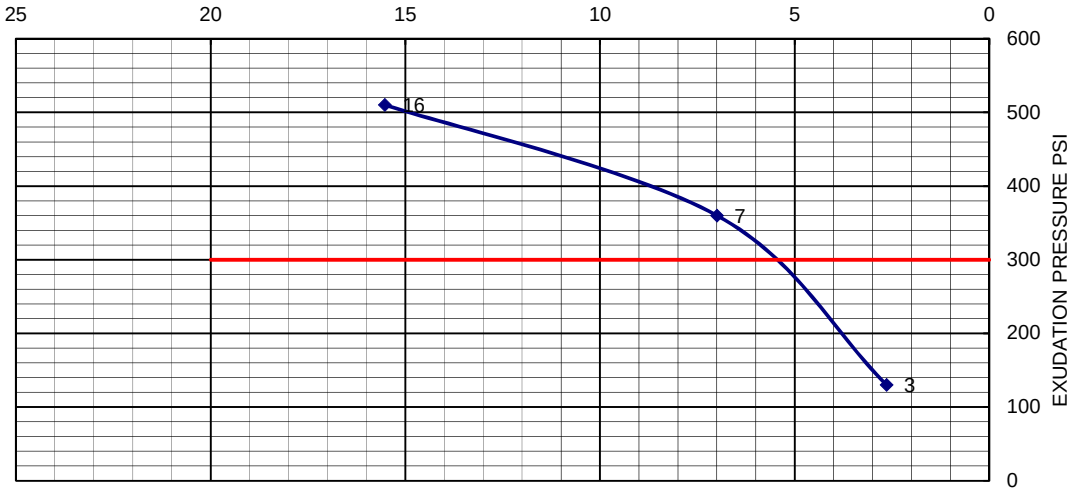

R-Value: 5

Sample No.	Depth (ft)	Soil/Sample Type	SE	w_0(%)
R.V. #1 (1A+2A	0	(SM) Silty sand	15	19.9

CHJ Consultants

R-VALUE TEST

Project:	Proposed Automated Car Wash and Auto Repair Center		
Location:	6741 Carson Street, Lakewood, California		
Job No.:	17122-3	Enclosure:	C-7

 Copyright© CHJ Consultants 2005 - 2017. All right reserved

		R Value By Exudation	5	
		R Value By Expansion	28	
		R Value By Equilibrium	**5**	
Thickness from Chart	**1.15**	G.E. = Total Section	1.52	
T.I.	5.0	G.E. Total Section - AC GE=	0.55	G.F.= 2.54
		Base GE =	0.97	
S.E.	15	Base Section GE/ GF 1.1	0.88	

Section: **AC 0.22** **ABII 0.88**
AC 0.64

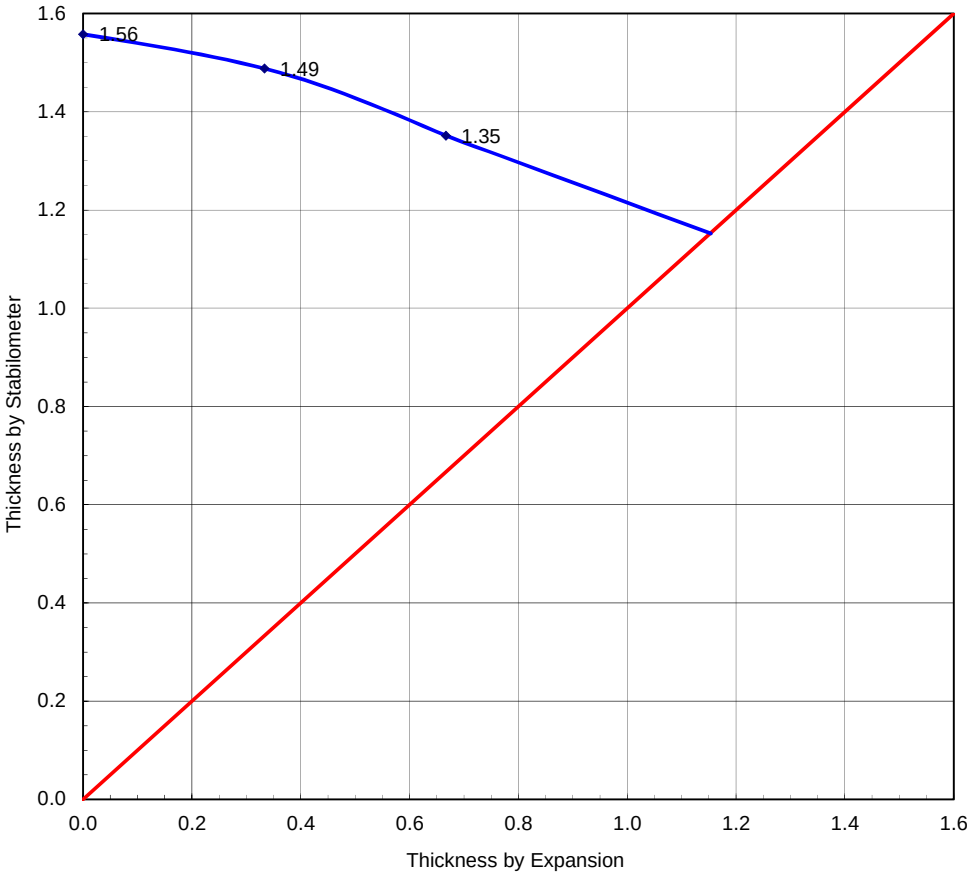

Sample No.	Depth (ft)	Soil/Sample Type	SE	w_0(%)
R.V. #1 (1A+2A	0	(SM) Silty sand	15.0	19.9

CHJ Consultants

R-VALUE BY EXPANSION			
Project:	Proposed Automated Car Wash and Auto Repair Center		
Location:	6741 Carson Street, Lakewood, California		
Job No.:	17122-3	Enclosure:	C-7a

 Copyright© CHJ Consultants 2005 - 2017. All right reserved

ASPHALT CONCRETE STRUCTURAL SECTION DESIGN

R-Value used	5

Traffic Index (T.I.)	Recommended Street Sections	
5.00	0.25' AC / 0.85' AB Class 2	0.65' AC / Native
5.50	0.25' AC / 1.00' AB Class 2	0.75' AC / Native
6.00	0.30' AC / 1.05' AB Class 2	0.85' AC / Native
6.50	0.30' AC / 1.20' AB Class 2	0.95' AC / Native
7.00	0.35' AC / 1.30' AB Class 2	1.05' AC / Native
7.50	0.40' AC / 1.35' AB Class 2	1.15' AC / Native
8.00	0.40' AC / 1.50' AB Class 2	1.30' AC / Native
8.50	0.45' AC / 1.60' AB Class 2	1.40' AC / Native
9.00	0.45' AC / 1.75' AB Class 2	1.55' AC / Native
9.50	0.50' AC / 1.80' AB Class 2	1.65' AC / Native
10.00	0.55' AC / 1.90' AB Class 2	1.80' AC / Native

NOTE: MIN. A.C. THICKNESS IS 0.25' MIN. A.B. THICKNESS IS 0.35'
All thicknesses arerounded to the nearest 0.05 foot.
The above values may not reflect applicable county or city minimum standards.
A safety factor of 0.20 for the G.E. of the A.C. is included as per Caltrans.
The values also include a safety factor of 0.10 for A.C./ native soil.
Some agencies do not permit placing A.C. over native soil.

PARKING LOT PCC SECTION DESIGN

R-Value	Concrete Compressive Strength, f_c (psi)	Flexural Strength, M_r (psi)
5	3500	592
Traffic Category	**ADTT**	**PCC Section (in)***
A	1	5
A	10	5.5
B	25	6.5
B	300	7
C	100	7.5
C	300	7.5
C	700	8
D	700	9
Modulus of subgrade reaction, k (pci)		50

* Rough-textured, angular-shaped aggregates

CHJ Consultants

AC & PCC STRUCTURAL SECTION DESIGN

Project:	Proposed Automated Car Wash and Auto Repair Center		
Location:	6741 Carson Street, Lakewood, California		
Job No.:	17122-3	Enclosure:	C-8

Copyright© CHJ Consultants 2005 - 2017. All right reserved

Table 1 - Laboratory Tests on Soil Samples

CHJ Consultants
Carwash & Auto Repair
Your #17122-3, HDR Lab #17-0235LAB
12-Apr-17

Sample ID			1A + 2A SM/ML
Resistivity		**Units**	
as-received		ohm-cm	6,800
saturated		ohm-cm	2,560
pH			7.6
Electrical Conductivity		mS/cm	0.15
Chemical Analyses			
Cations			
calcium	Ca^{2+}	mg/kg	83
magnesium	Mg^{2+}	mg/kg	18
sodium	Na^{1+}	mg/kg	53
potassium	K^{1+}	mg/kg	18
Anions			
carbonate	CO_3^{2-}	mg/kg	ND
bicarbonate	HCO_3^{1-}	mg/kg	323
fluoride	F^{1-}	mg/kg	56
chloride	Cl^{1-}	mg/kg	0.6
sulfate	SO_4^{2-}	mg/kg	83
phosphate	PO_4^{3-}	mg/kg	ND
Other Tests			
ammonium	NH_4^{1+}	mg/kg	2.4
nitrate	NO_3^{1-}	mg/kg	9.7
sulfide	S^{2-}	qual	na
Redox		mV	na

Resistivity per ASTM G187, Cations per ASTM D6919, Anions per ASTM D4327, and Alkalinity per APHA 2320-B.
Electrical conductivity in millisiemens/cm and chemical analyses were made on a 1:5 soil-to-water extract.
mg/kg = milligrams per kilogram (parts per million) of dry soil.
Redox = oxidation-reduction potential in millivolts
ND = not detected
na = not analyzed

431 West Baseline Road · Claremont, CA 91711
Phone: 909.962.5485 · Fax: 909.626.3316

APPENDIX "D"

GEOTECHNICAL CALCULATIONS

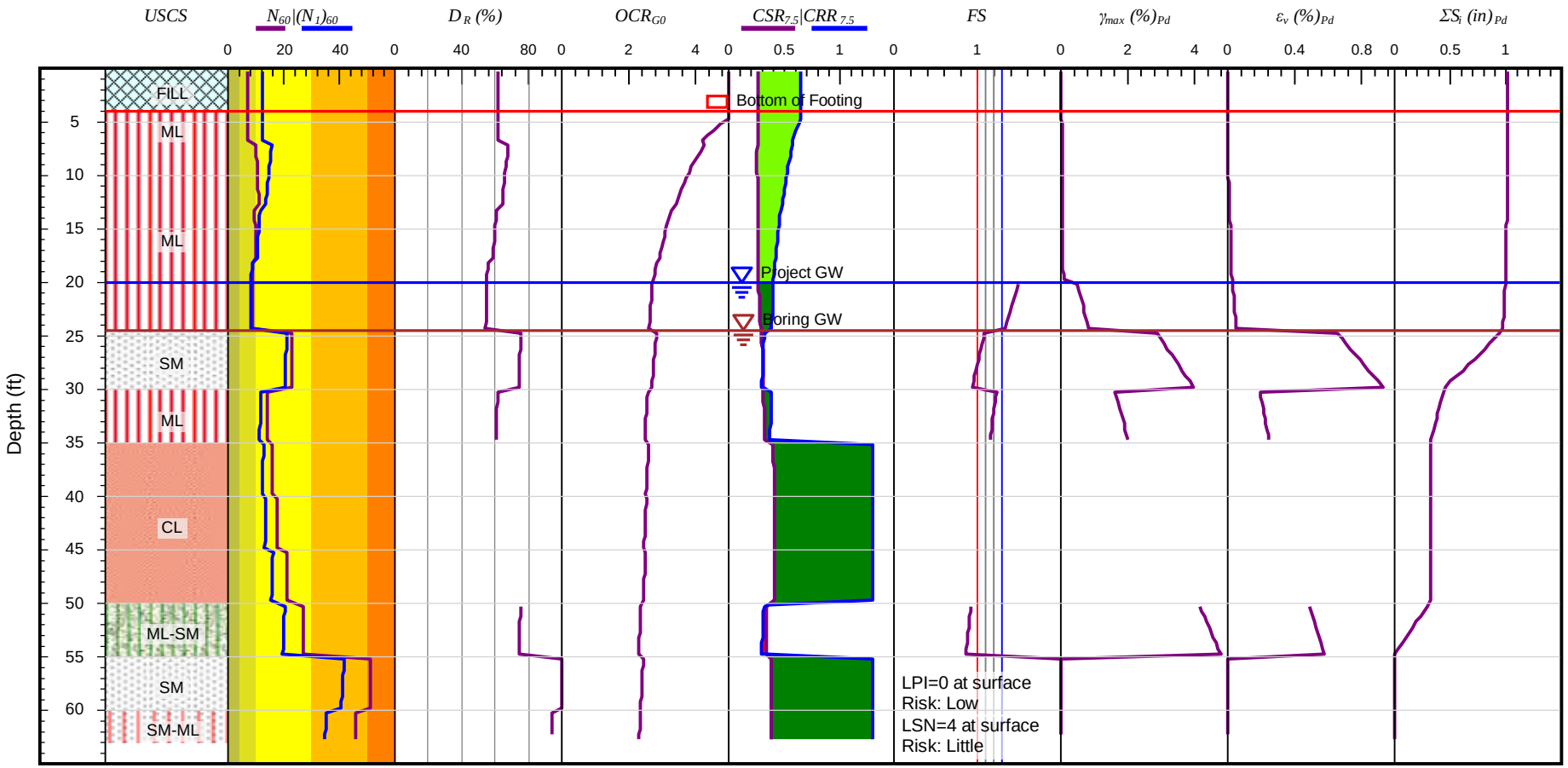

FILL SM ML-SM
ML CL SM-ML

Earthquake & Groundwater Information:
Magnitude = 6.51
Max. Acceleration = 0.58 g
Project GW = 20 ft
Maximum Settlement = 1.01 in
Settlement at Bottom of Footing = 1.01 in

Liquefaction: Idriss & Boulanger (2008)
Settl.: [dry] Pradel (1998); [sat] Idriss & Boulanger (2008)
Lateral spreading: Idriss & Boulanger (2008)
M correction: [Sand; Clay] Boulanger & Idriss(2004)
σv correction: Idriss & Boulanger (2008)
Stress reduction: Idriss & Boulanger (2008)

CHJ Consultants
A Terracon COMPANY

Seismic Settlement Potential - SPT Data

Project:	Proposed Automated Car Wash and Auto Repair Center				
Location:	6741 Carson Street, Lakewood, California				
Job Number:	CB175122	Boring No.:	B-2	Enclosure:	D-1

G:\2017\17122-3 Parkcrest, Car Wash & Aut Repair Ctr\liq\GeoSuite_CB175122_B-2.csv

GeoSuite© Version 2.4.1.4. Developed by Fred Yi, PhD, PE, GE
Copyright© 2002 - 2017 GeoAdvanced™. All rights reserved _Commercial Copy
Prepared at 4/17/2017 3:09:06 PM

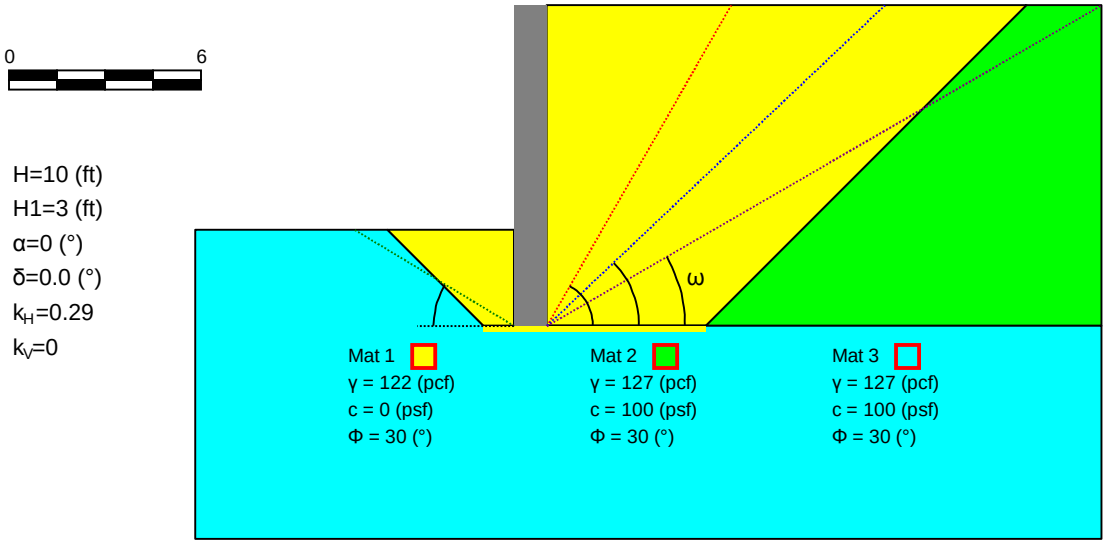

	P_{pL}	P_a	P_{aE}	P_{pR}
H (ft)	3	10	10	10
Z_c(ft)	-	0	0	-
Total	366	41	68	366
Hori.	366	41	68	366
Vert.	-	0	0	-
ω (°)	31.00	60.00	43.38	30.00
Restrained (Level Backfill)				61
Base Friction Coefficient				0.36

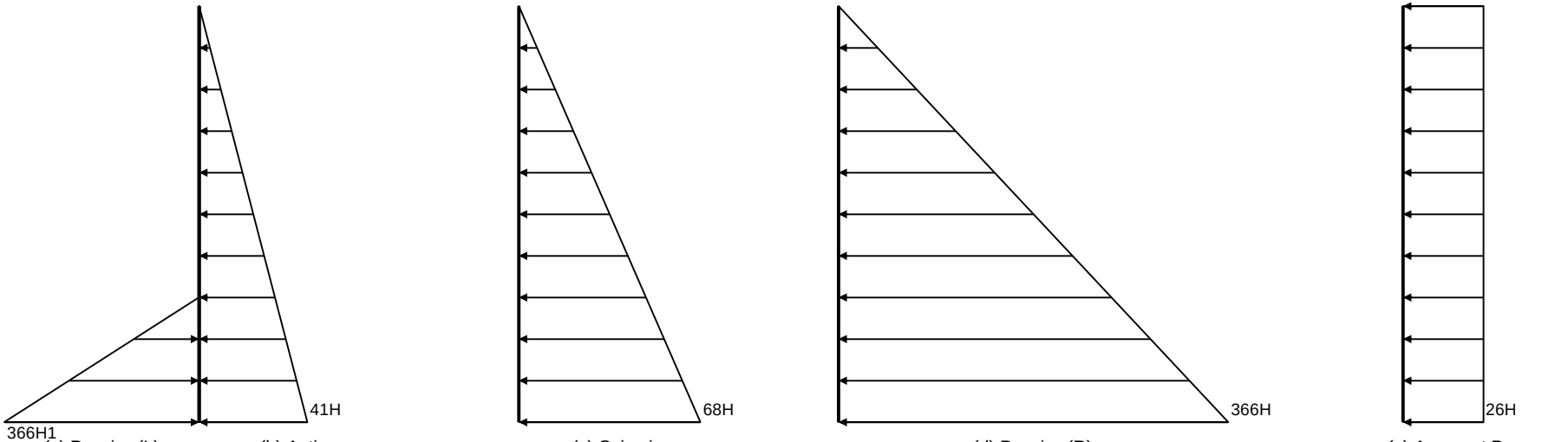

(a) Passive (L) (b) Active (c) Seismic (d) Passive (R) (e) Apparent Pressure

CHJ Consultants
A Terracon COMPANY

Earth Pressures

Project:	Proposed Automated Car Wash and Auto Repair Center				
Location:	6741 Carson Street, Lakewood, California				
Job Number:	CB175122	Boring No.:	B-2	Enclosure:	D-2

G:\2017\17122-3 Parkcrest, Car Wash & Aut Repair Ctr\liqu\GeoSuite_CB175122_B-2.csv

GeoSuite© Version 2.4.1.4. Developed by Fred Yi, PhD, PE, GE
Copyright© 2002 - 2017 GeoAdvanced™. All rights reserved _Commercial Copy
Prepared at 4/17/2017 3:09:06 PM

APPENDIX “F”

Asbestos and Lead Paint Survey and Hazardous Building Materials Inventory Memo and Report

ALBERT A. WEBB ASSOCIATES

Memorandum

To: Paul Kuykendall, City of Lakewood

From: Eliza Laws, Senior Environmental Analyst
Jessica May, Assistant Environmental Analyst

Date: May 24, 2017

Re: Review of Recommendations from the Asbestos and Lead Paint Survey and Hazardous Building Materials Inventory Report for the Automated Car Wash and Auto Repair Center Project located at 6741 Carson Street, Lakewood, California

Enclosed is the requested summary of the impacts and recommended mitigation from the hazardous materials evaluation Terracon Consultants Inc. prepared in April 2017, The *Asbestos and Lead Paint Survey and Hazardous Building Materials Inventory Report* (Inventory Report) was prepared to determine the potential for hazardous materials at the existing vacant McDonald's Restaurant scheduled for demolition to prepare for the proposed automated carwash and auto repair center. Asbestos and other hazardous materials were observed at the Project site during the visual and physical assessment of the Project site; however, no lead-containing paint was detected at the Project site.

Accordingly, the Inventory Report identified the following impacts and recommended mitigation for these potential hazards.

Hazardous Material	Impact	Mitigation
Asbestos	Based on the results of laboratory analysis, asbestos was detected in the black and grey penetration mastic on the roof. Appendix A of the *Asbestos and Lead Paint Survey and Hazardous Building Materials Inventory Report* (herein after "the Report") provides a description of the ACM, assumed ACM, locations, percentage of asbestos and approximate quantity of each material.	A California certified contractor must be used for the abatement of asbestos-containing materials. A project manual for the abatement design should also be generated prior to the planned abatement activities.

Hazardous Material	Impact	Mitigation
Other Hazardous Materials Observed	During survey efforts, Terracon observed approximately two hundred and sixty-four (264) fluorescent light tubes and four (4) compact fluorescent light tubes throughout the structure.	Fluorescent light tubes are considered universal waste. The United States Environmental Protection Agency (USEPA) recommends fluorescent light tubes be taken to a household hazardous waste collection or recycling center.
	During survey efforts, Terracon observed one (1) refrigerator and one (1) ice machine.	Appliances with cooling elements are subject to USEPA's safe disposal requirements. Under the federal regulations, refrigerants must be properly removed before an appliance is dropped off or collected for disposal at solid waste landfills, metal recyclers, or similar facilities.
Note: Demolition and renovation work that would disturb hazardous materials should be performed utilizing safe work practices for identified metals. Contractors engaged in disturbance of these materials should be notified of their potential content. *Should suspect materials other than those which were identified during the survey be uncovered prior to or during the demolition and renovation process, those materials should be assumed asbestos-containing until sampling and analysis can confirm or deny their asbestos content. Work should be conducted in accordance with applicable provisions of Cal/OSHA standards.*		

Source: Terracon Consultants, Inc. *Proposed Automated Carwash and Auto Repair Center Asbestos and Lead Paint Survey and Hazardous Building Materials Inventory Report*, dated April 14, 2017.

APPENDIX “G”

City of Lakewood Department of Water Resources
Will-Serve Letter

STATEMENT OF WATER SERVICE TO NEW SUBSCRIBERS FOR NEW OR UPGRADED WATER DISTRIBUTION SYSTEMS

June 13, 2017

Parkcrest Construction Inc.
A Real Estate Dev. Co.
2910 S Archibald Ave. Ste. A-350
Ontario, CA 91760

SUBJECT: STATEMENT OF WATER SERVICE FOR PARCEL NO.7063-016-021
PROJECT 6741 Carson Street

Attention: Mark Russell

This is to certify that the proposed water system to serve the above referenced Parcel Map will be operated by this water purveyor:

City of Lakewood
5050 Clark Avenue
Lakewood, CA 90712

The proposed water distribution system for the above referenced subdivision will be adequate during normal operating condition to meet the requirement for the water system of this subdivision as provided in Chapter 20.16 of Title 20 of the Los Angeles County Code (Water Code) and as shown on the plans, domestic flow requirements as required by Section 20.16.070 and fire hydrant requirements with a ____ GPM (to be confirmed during fire flow test) at 60 PSI minimum fire flow requirement met by off-site water system improvements already completed.

Please contact me with any questions at 562-866-9771 extension 2703.

Sincerely,

Derwin Dy
Assistant Director of Water Resources

cc: Community Development, City of Lakewood

APPENDIX “H”

Hydrology Study

HYDROLOGY STUDY

Carson Street Car Wash

6741 East Carson Street
11609 216th Street
Lakewood, CA 90713
APN 7063-016-021

PM 72930

Prepared for*:*
Parkcrest Construction, Inc.
2910 S. Archibald Ave., Suite A-350
Ontario, CA 91761
(909) 509-5090

Prepared by:
Land Development Design Company, LLC (LDDC)
2313 E. Philadelphia St., Suite F
Ontario, CA 91761
(909) 930-1466
Kevin J. Richer
E-mail: Kevin.richer@lddc.net

Date: June 13, 2017

Prepared under the supervision of:

_____

Kevin J. Richer
RCE 43714, Exp. 3/31/19

Table of Contents

Discussion……..1

Appendix A
Los Alamitos Isohyet

Appendix B
Rational Method Output (Pre-Developed)

Appendix C
Rational Method Output (Post-Developed)

Discussion

The purpose of this study is to determine the storm flows generated by the pre-developed and post-developed condition of the project site. The project site is located in the city of Lakewood, and proposes to re-develop the site as a car wash. The site is bounded by an alley to the west and north, by a commercial development to the east, and to the south by Carson Street.

In its existing condition, the site is developed as a restaurant. Improvements include a building, AC pavement, concrete sidewalk, concrete curbs and gutters, landscaping, and fencing. The site is currently 22% pervious and storm flows sheet towards the northeasterly corner of the site, discharging across the northerly property line into the alley. It does not accept off-site run-on from the adjacent properties. See Pre-Developed Hydrology Map in Appendix B.

The proposed development will remove all existing improvements and construct a car wash building, a retail building, AC pavement, concrete sidewalk, concrete curbs and gutters, landscaping, fencing, a trash enclosure, and a biofiltration basin. It will be 21% pervious. The proposed site design will mimic the drainage pattern of the pre-developed condition, directing storm flows to the northerly boundary where they are intercepted by a proposed biofiltration basin. See Post-Developed Hydrology Map in Appendix C.

A Peak Flow Hydrologic Analysis has been prepared for both the pre-developed condition and the post-developed condition of the project site, using the HydroCalc program from LACDPW. The site soil condition is 006 and the 50yr-24hr rainfall is 5.10inches. See the Los Alamitos Isohyet in Appendix A. The post-developed condition of the project site generates less storm flows than the pre-developed condition; therefore hydromodification is not necessary. (See Appendix B for analysis results of the pre-developed condition, and Appendix C for analysis results of the post-developed condition.)

Appendix A

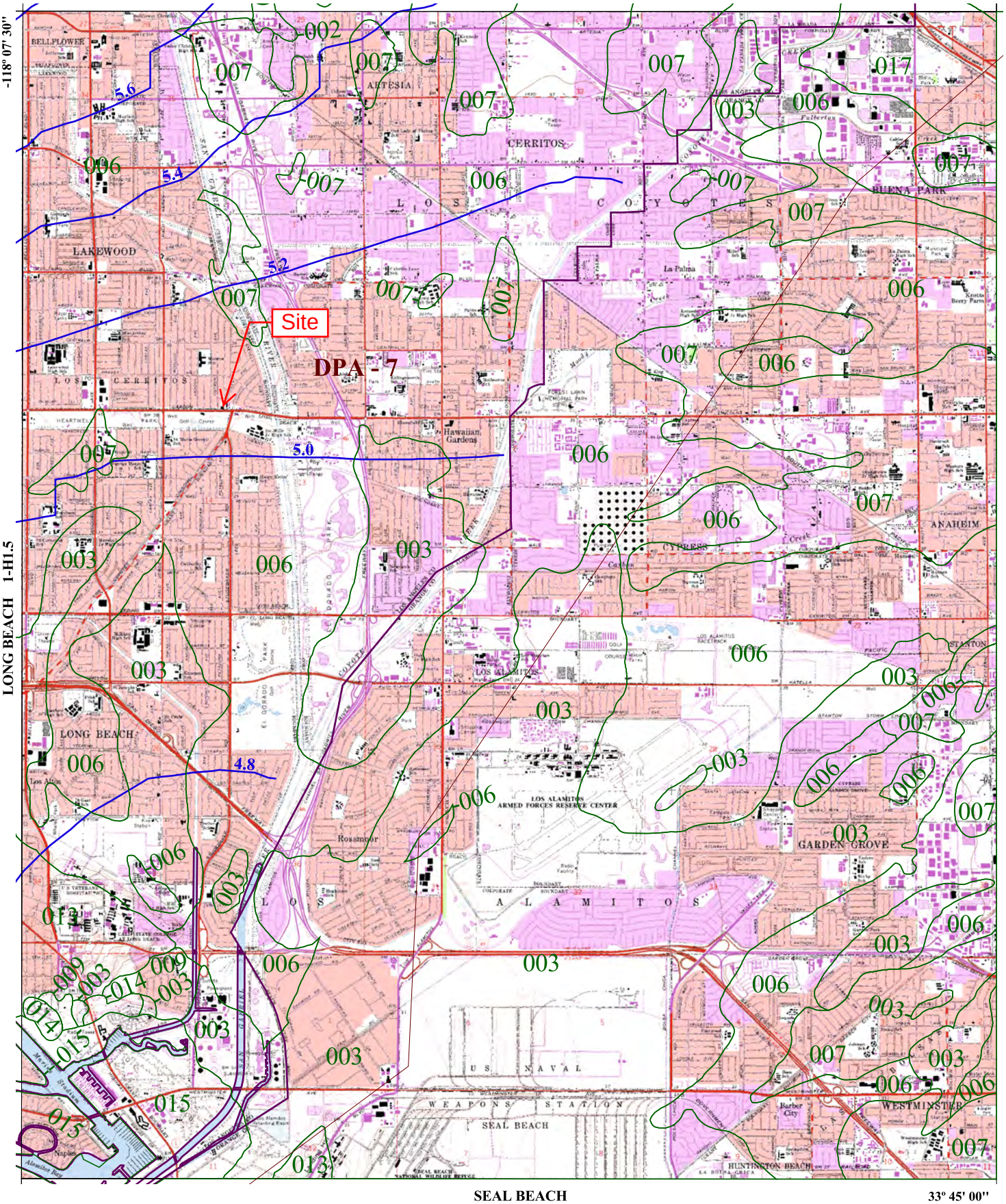

N
W E
S

016 SOIL CLASSIFICATION AREA

7.2 INCHES OF RAINFALL

DPA - 6 DEBRIS POTENTIAL AREA

1 0 1 2 Miles

25-YEAR 24-HOUR ISOHYET REDUCTION FACTOR: 0.878
10-YEAR 24-HOUR ISOHYET REDUCTION FACTOR: 0.714

LOS ALAMITOS
50-YEAR 24-HOUR ISOHYET

1-H1.6

LOS ANGELES COUNTY PUBLIC WORKS
Public Service That Works

Appendix B

HYDROLOGIC PARAMETERS	
24HR-50YR RAINFALL DEPTH	5.1 IN.
PERCENT IMPERVIOUS	78%
SOIL TYPE	006
FIRE FACTOR	0

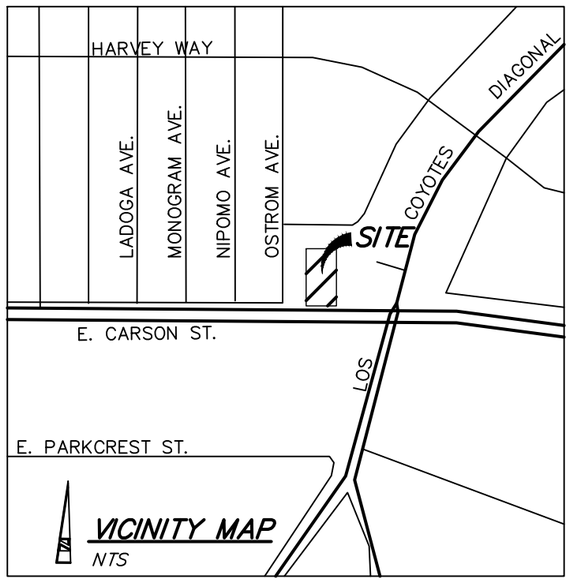

VICINITY MAP
NTS

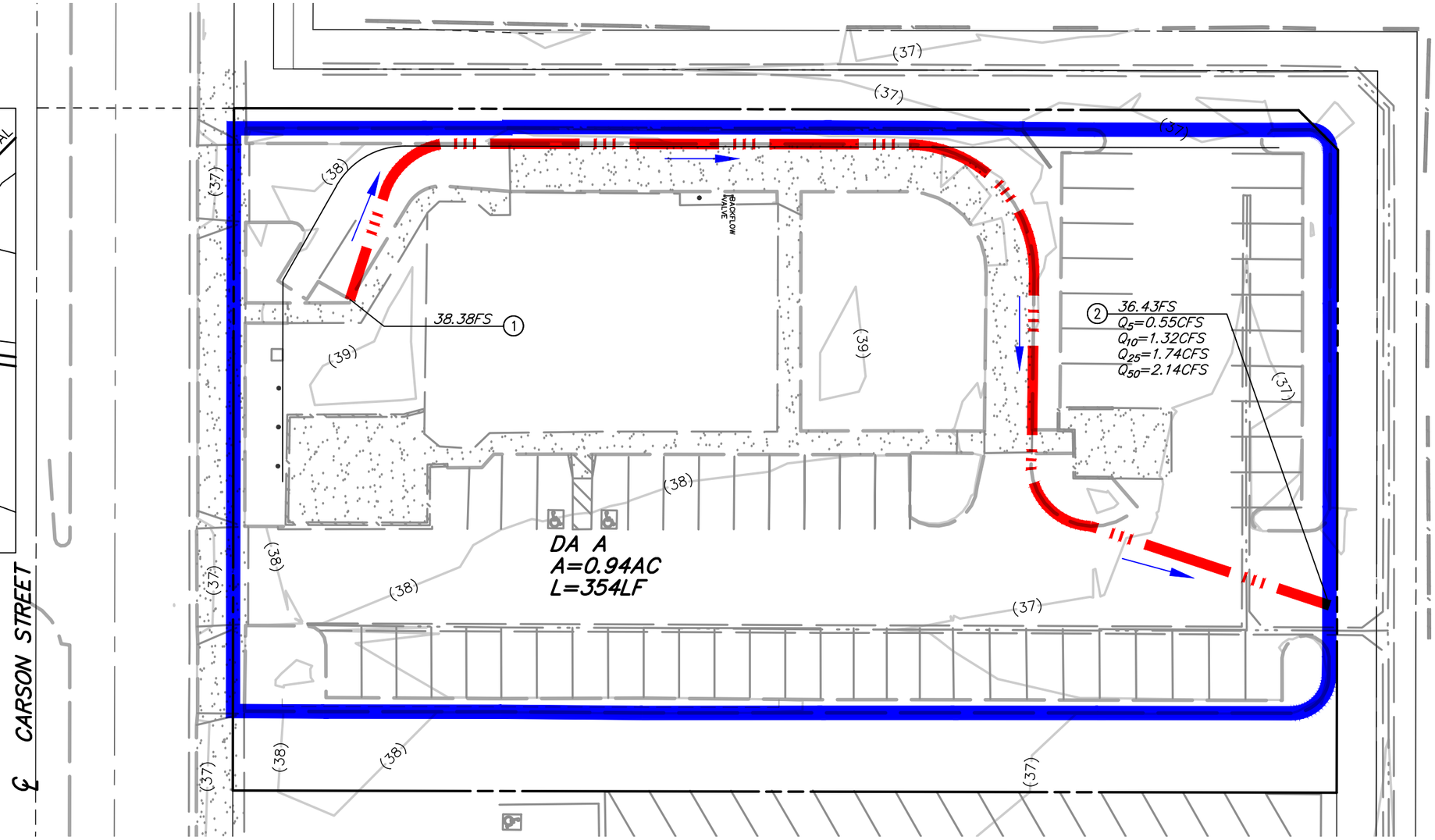

NOTES

1. PROJECT NOT WITHIN COUNTY ADOPTED FLOODWAY.
2. PROJECT NOT WITHIN FEMA FLOODZONE "A".

LEGEND

- WATER SHED BOUNDARY
- WATER COURSE
- DIRECTION OF FLOW
- (#) NODE NUMBER

30 0 30 60 90

Scale 1" = 30'

DRAINAGE CONCEPT/ HYDROLOGY MAP

(PRE-DEVELOPED)

Peak Flow Hydrologic Analysis

File location: G:/projects/5720/Hydrology/Data/5720_U2A.pdf
Version: HydroCalc 0.3.0-beta

Input Parameters

Project Name	6741 Carson Street
Subarea ID	DA A - PRE DEV
Area (ac)	0.94
Flow Path Length (ft)	354.0
Flow Path Slope (vft/hft)	0.0055
50-yr Rainfall Depth (in)	5.1
Percent Impervious	0.78
Soil Type	6
Design Storm Frequency	2-yr
Fire Factor	0
LID	False

Output Results

Modeled (2-yr) Rainfall Depth (in)	1.9737
Peak Intensity (in/hr)	0.7258
Undeveloped Runoff Coefficient (Cu)	0.4828
Developed Runoff Coefficient (Cd)	0.8082
Time of Concentration (min)	14.0
Clear Peak Flow Rate (cfs)	0.5514
Burned Peak Flow Rate (cfs)	0.5514
24-Hr Clear Runoff Volume (ac-ft)	0.112
24-Hr Clear Runoff Volume (cu-ft)	4878.049

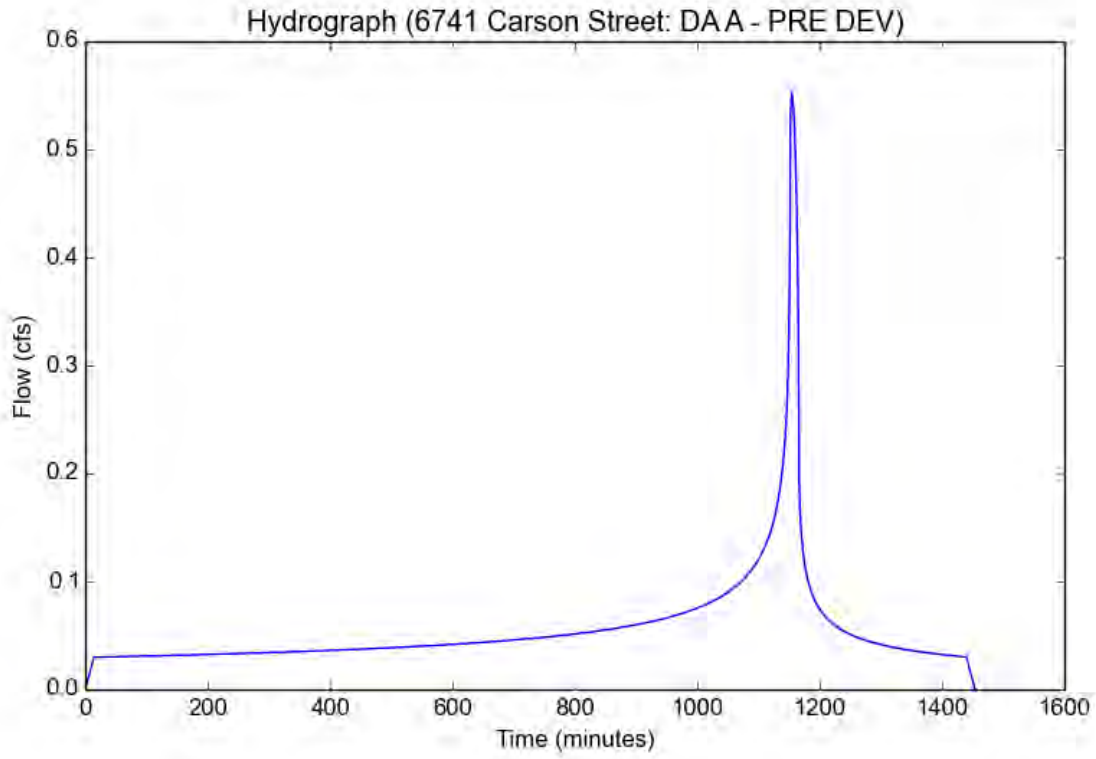

Peak Flow Hydrologic Analysis

File location: G:/projects/5720/Hydrology/Data/5720_U10A.pdf
Version: HydroCalc 0.3.0-beta

Input Parameters

Project Name	6741 Carson Street
Subarea ID	DA A - PRE DEV
Area (ac)	0.94
Flow Path Length (ft)	354.0
Flow Path Slope (vft/hft)	0.0055
50-yr Rainfall Depth (in)	5.1
Percent Impervious	0.78
Soil Type	6
Design Storm Frequency	10-yr
Fire Factor	0
LID	False

Output Results

Modeled (10-yr) Rainfall Depth (in)	3.6414
Peak Intensity (in/hr)	1.6481
Undeveloped Runoff Coefficient (Cu)	0.6937
Developed Runoff Coefficient (Cd)	0.8546
Time of Concentration (min)	9.0
Clear Peak Flow Rate (cfs)	1.324
Burned Peak Flow Rate (cfs)	1.324
24-Hr Clear Runoff Volume (ac-ft)	0.2088
24-Hr Clear Runoff Volume (cu-ft)	9096.0348

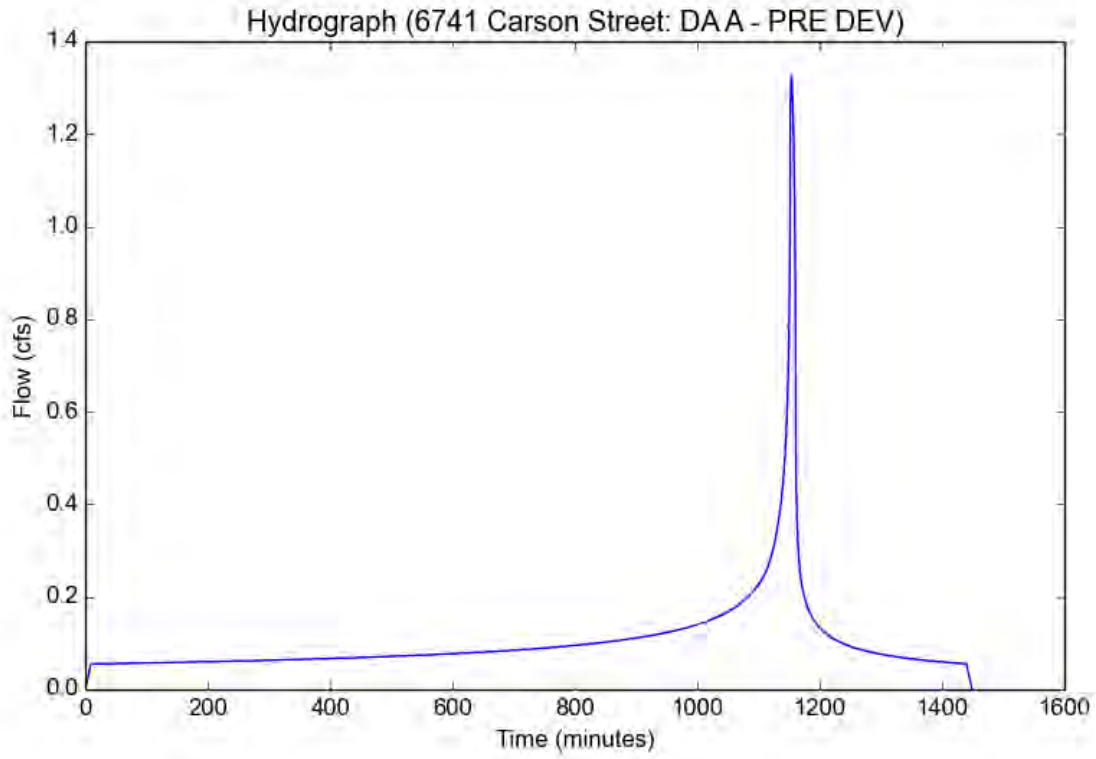

Peak Flow Hydrologic Analysis

File location: G:/projects/5720/Hydrology/Data/5720_U25A.pdf
Version: HydroCalc 0.3.0-beta

Input Parameters

Project Name	6741 Carson Street
Subarea ID	DA A - PRE DEV
Area (ac)	0.94
Flow Path Length (ft)	354.0
Flow Path Slope (vft/hft)	0.0055
50-yr Rainfall Depth (in)	5.1
Percent Impervious	0.78
Soil Type	6
Design Storm Frequency	25-yr
Fire Factor	0
LID	False

Output Results

Modeled (25-yr) Rainfall Depth (in)	4.4778
Peak Intensity (in/hr)	2.1421
Undeveloped Runoff Coefficient (Cu)	0.7479
Developed Runoff Coefficient (Cd)	0.8665
Time of Concentration (min)	8.0
Clear Peak Flow Rate (cfs)	1.7448
Burned Peak Flow Rate (cfs)	1.7448
24-Hr Clear Runoff Volume (ac-ft)	0.2581
24-Hr Clear Runoff Volume (cu-ft)	11244.2828

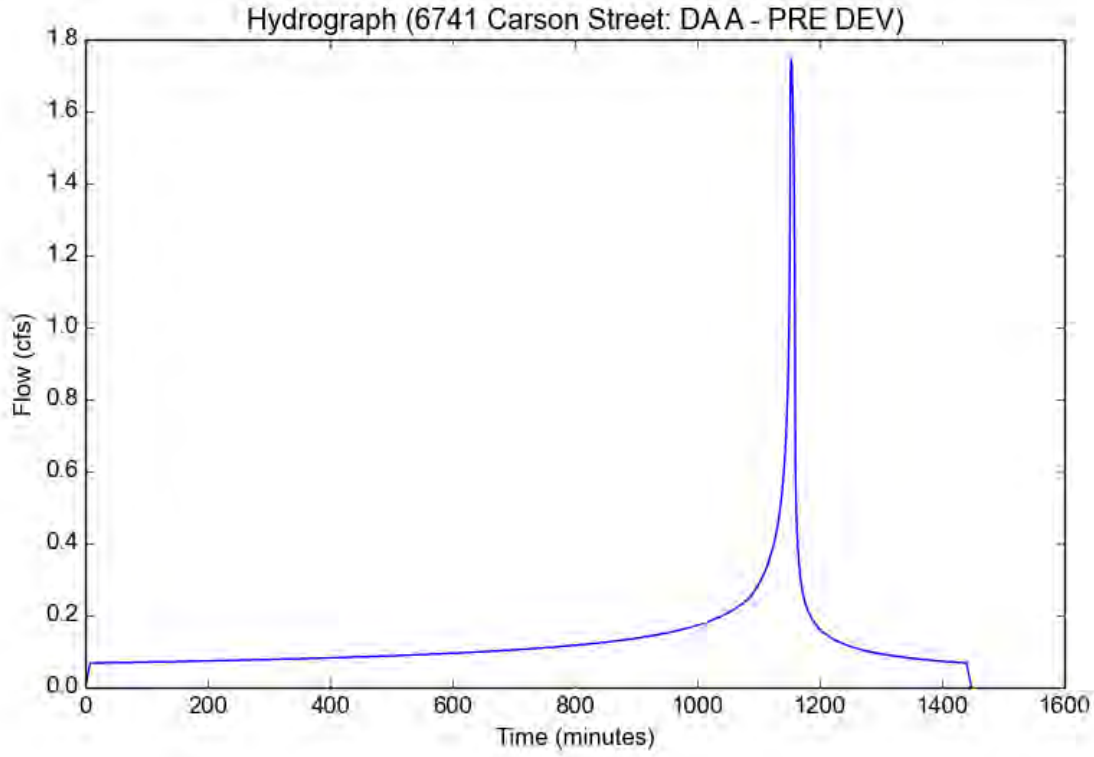

Peak Flow Hydrologic Analysis

File location: G:/projects/5720/Hydrology/Data/5720_U50A.pdf
Version: HydroCalc 0.3.0-beta

Input Parameters

Project Name	6741 Carson Street
Subarea ID	DA A - PRE DEV
Area (ac)	0.94
Flow Path Length (ft)	354.0
Flow Path Slope (vft/hft)	0.0055
50-yr Rainfall Depth (in)	5.1
Percent Impervious	0.78
Soil Type	6
Design Storm Frequency	50-yr
Fire Factor	0
LID	False

Output Results

Modeled (50-yr) Rainfall Depth (in)	5.1
Peak Intensity (in/hr)	2.5977
Undeveloped Runoff Coefficient (Cu)	0.794
Developed Runoff Coefficient (Cd)	0.8767
Time of Concentration (min)	7.0
Clear Peak Flow Rate (cfs)	2.1407
Burned Peak Flow Rate (cfs)	2.1407
24-Hr Clear Runoff Volume (ac-ft)	0.2952
24-Hr Clear Runoff Volume (cu-ft)	12859.7322

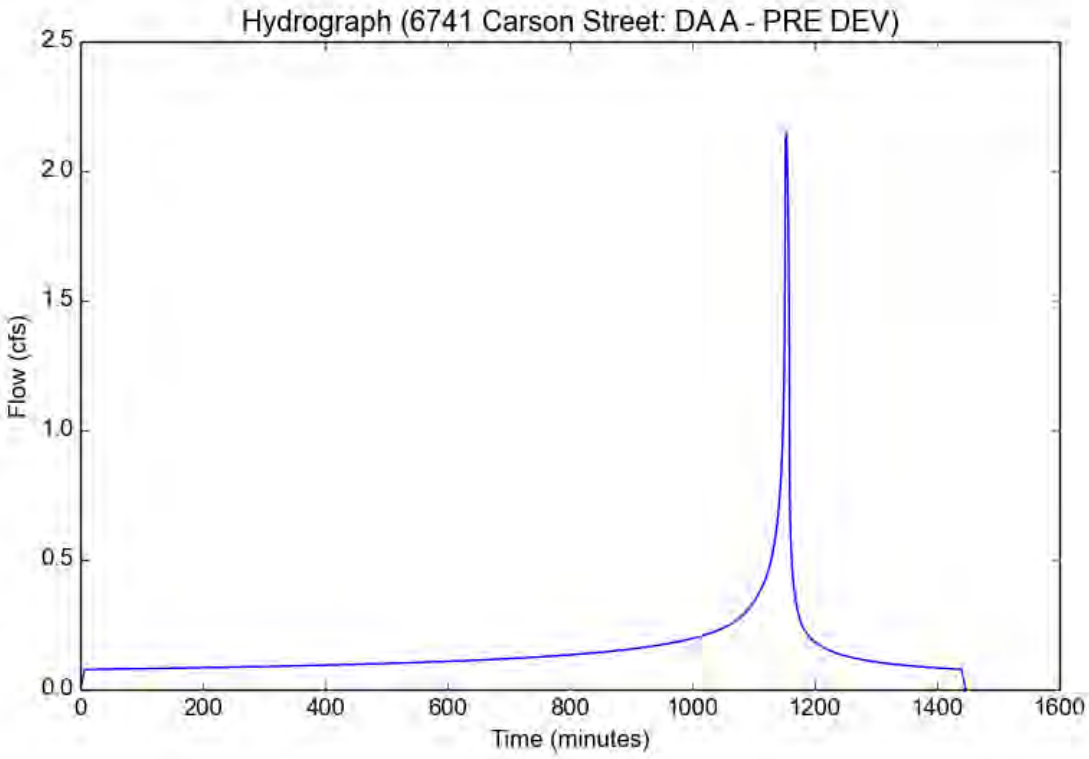

Appendix C

HYDROLOGIC PARAMETERS	
24HR–50YR RAINFALL DEPTH	5.1 IN.
PERCENT IMPERVIOUS	79%
SOIL TYPE	006
FIRE FACTOR	0

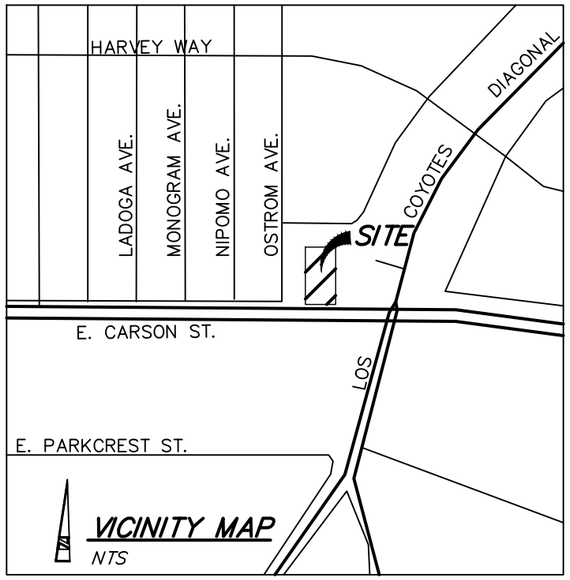

VICINITY MAP
NTS

BMP PARAMETERS	
DESIGN STORM: 85TH PERCENTILE	0.75 IN.
DESIGN STORM VOLUME	2,757CF
DESIGN BMP VOLUME	2,762CF
PERCENT RETAINED ON–SITE	100%

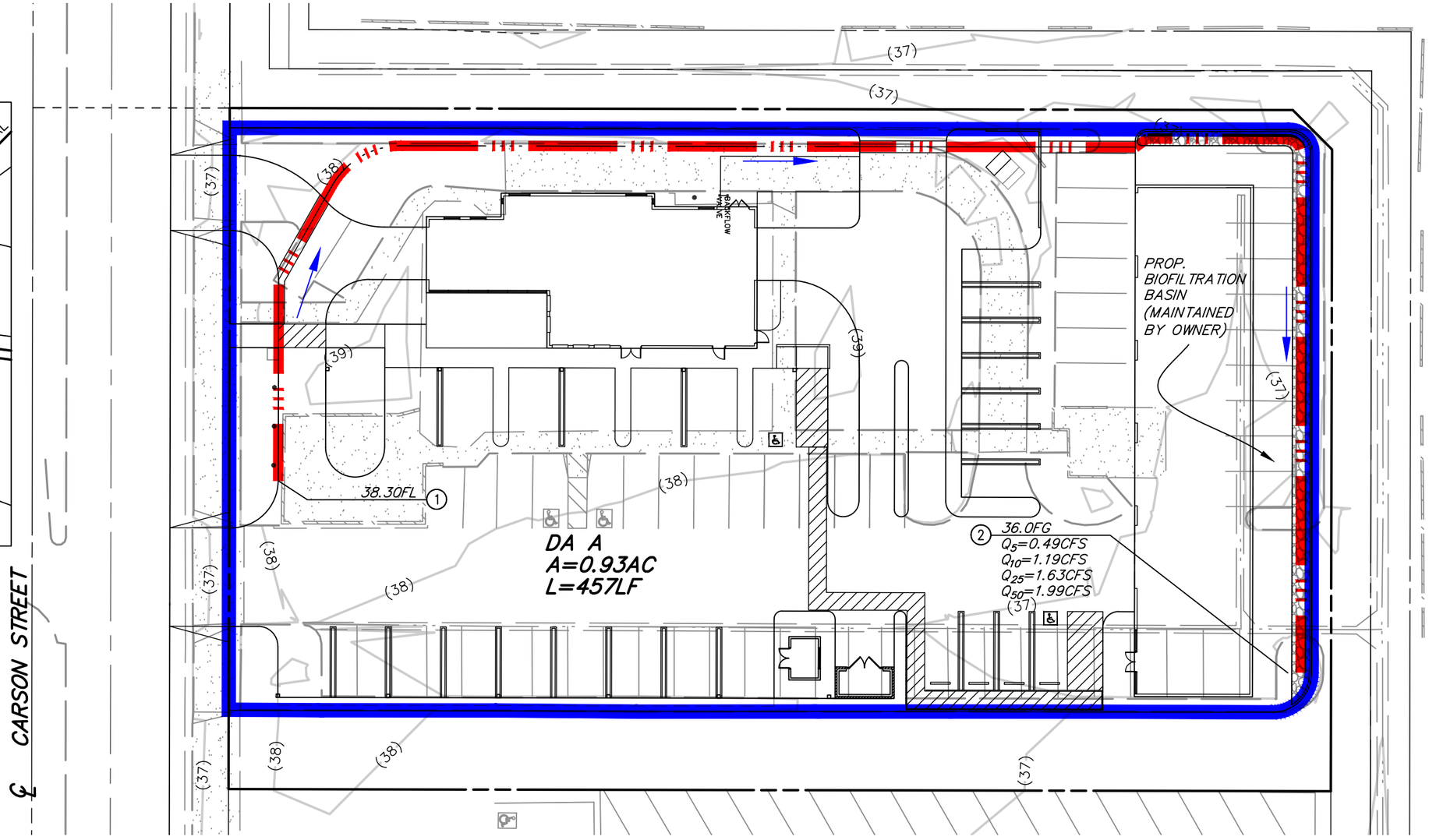

NOTES

1. PROJECT NOT WITHIN COUNTY ADOPTED FLOODWAY.
2. PROJECT NOT WITHIN FEMA FLOODZONE "A".

LEGEND

- WATER SHED BOUNDARY
- WATER COURSE
- DIRECTION OF FLOW
- (#) NODE NUMBER

30 0 30 60 90

Scale 1" = 30'

DRAINAGE CONCEPT/ HYDROLOGY MAP

(POST-DEVELOPED)

Peak Flow Hydrologic Analysis

File location: G:/projects/5720/Hydrology/Data/5720_D2A.pdf
Version: HydroCalc 0.3.0-beta

Input Parameters

Project Name	6741 Carson Street
Subarea ID	DA A - POST DEV
Area (ac)	0.93
Flow Path Length (ft)	457.0
Flow Path Slope (vft/hft)	0.005
50-yr Rainfall Depth (in)	5.1
Percent Impervious	0.79
Soil Type	6
Design Storm Frequency	2-yr
Fire Factor	0
LID	False

Output Results

Modeled (2-yr) Rainfall Depth (in)	1.9737
Peak Intensity (in/hr)	0.6625
Undeveloped Runoff Coefficient (Cu)	0.4381
Developed Runoff Coefficient (Cd)	0.803
Time of Concentration (min)	17.0
Clear Peak Flow Rate (cfs)	0.4948
Burned Peak Flow Rate (cfs)	0.4948
24-Hr Clear Runoff Volume (ac-ft)	0.1119
24-Hr Clear Runoff Volume (cu-ft)	4874.4384

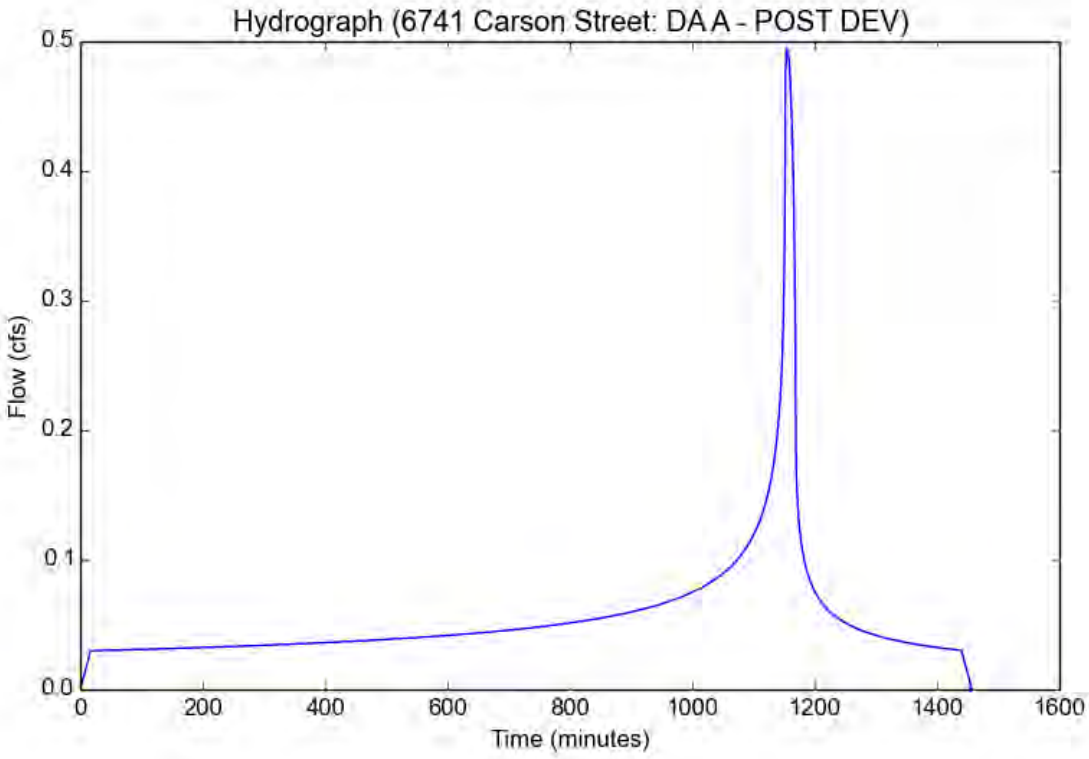

Peak Flow Hydrologic Analysis

File location: G:/projects/5720/Hydrology/Data/5720_D10A.pdf
Version: HydroCalc 0.3.0-beta

Input Parameters

Project Name	6741 Carson Street
Subarea ID	DA A - POST DEV
Area (ac)	0.93
Flow Path Length (ft)	457.0
Flow Path Slope (vft/hft)	0.005
50-yr Rainfall Depth (in)	5.1
Percent Impervious	0.79
Soil Type	6
Design Storm Frequency	10-yr
Fire Factor	0
LID	False

Output Results

Modeled (10-yr) Rainfall Depth (in)	3.6414
Peak Intensity (in/hr)	1.4998
Undeveloped Runoff Coefficient (Cu)	0.6774
Developed Runoff Coefficient (Cd)	0.8532
Time of Concentration (min)	11.0
Clear Peak Flow Rate (cfs)	1.1901
Burned Peak Flow Rate (cfs)	1.1901
24-Hr Clear Runoff Volume (ac-ft)	0.2086
24-Hr Clear Runoff Volume (cu-ft)	9088.4248

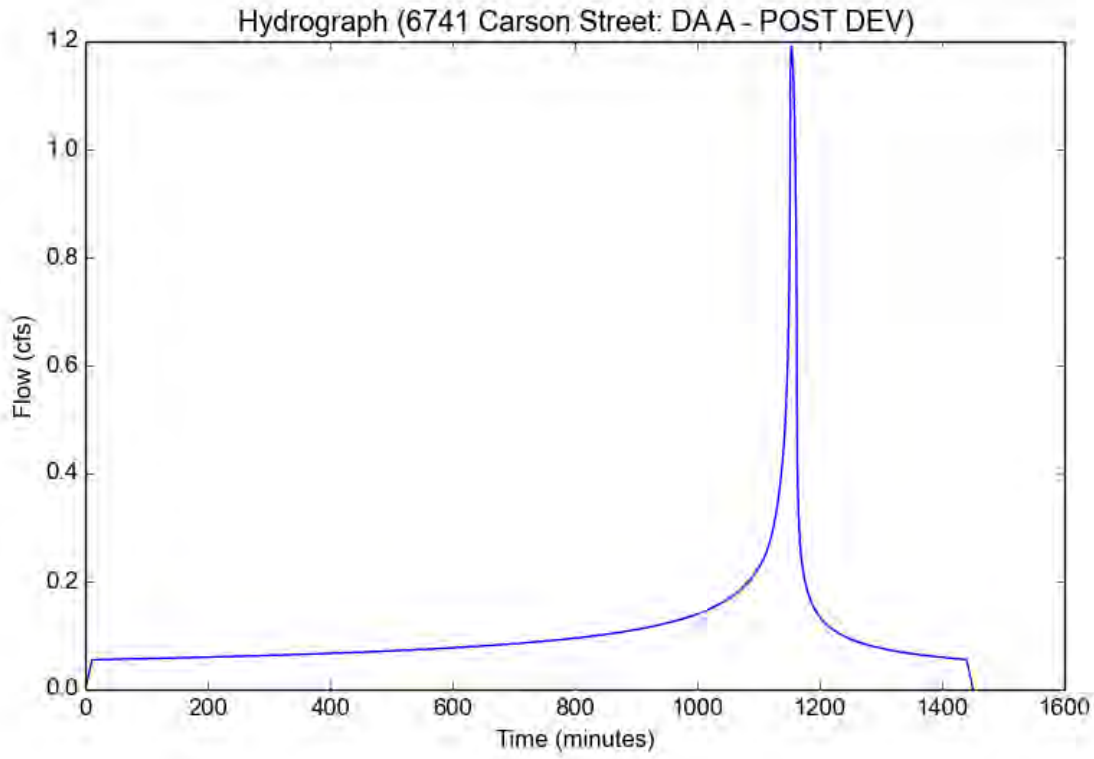

Peak Flow Hydrologic Analysis

File location: G:/projects/5720/Hydrology/Data/5720_D25A.pdf
Version: HydroCalc 0.3.0-beta

Input Parameters

Project Name	6741 Carson Street
Subarea ID	DA A - POST DEV
Area (ac)	0.93
Flow Path Length (ft)	457.0
Flow Path Slope (vft/hft)	0.005
50-yr Rainfall Depth (in)	5.1
Percent Impervious	0.79
Soil Type	6
Design Storm Frequency	25-yr
Fire Factor	0
LID	False

Output Results

Modeled (25-yr) Rainfall Depth (in)	4.4778
Peak Intensity (in/hr)	2.0267
Undeveloped Runoff Coefficient (Cu)	0.7352
Developed Runoff Coefficient (Cd)	0.8654
Time of Concentration (min)	9.0
Clear Peak Flow Rate (cfs)	1.6311
Burned Peak Flow Rate (cfs)	1.6311
24-Hr Clear Runoff Volume (ac-ft)	0.2578
24-Hr Clear Runoff Volume (cu-ft)	11231.613

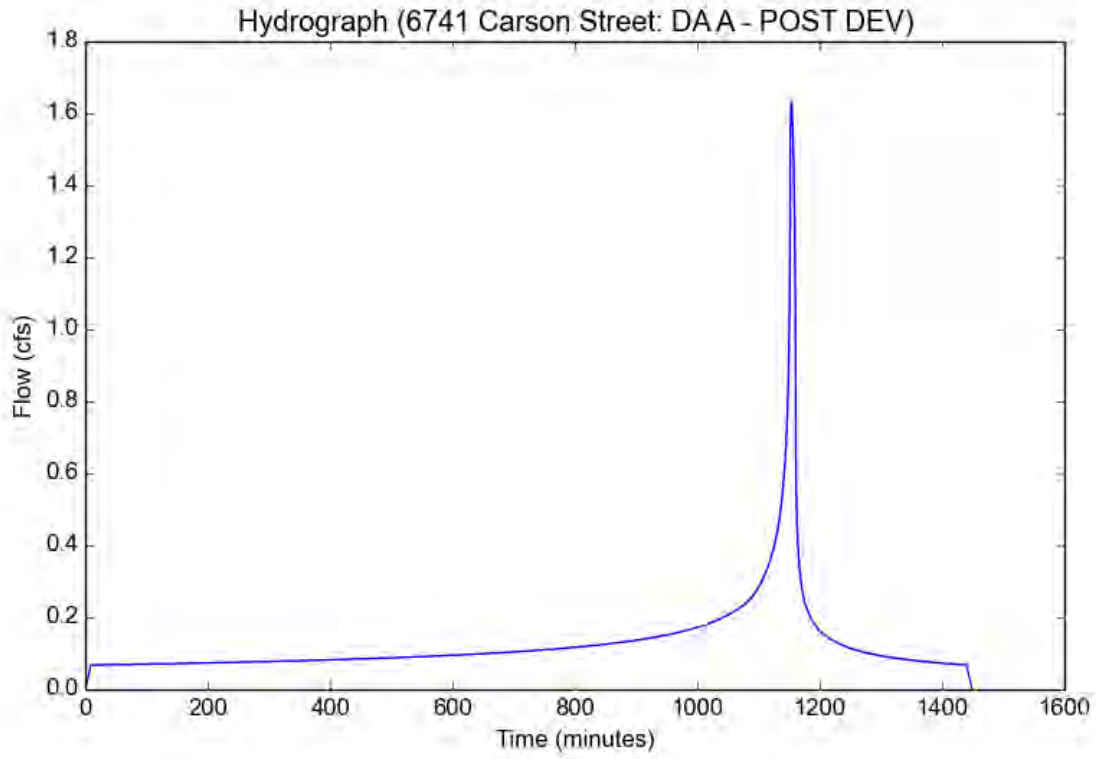

Peak Flow Hydrologic Analysis

File location: G:/projects/5720/Hydrology/Data/5720_D50A.pdf
Version: HydroCalc 0.3.0-beta

Input Parameters

Project Name	6741 Carson Street
Subarea ID	DA A - POST DEV
Area (ac)	0.93
Flow Path Length (ft)	457.0
Flow Path Slope (vft/hft)	0.005
50-yr Rainfall Depth (in)	5.1
Percent Impervious	0.79
Soil Type	6
Design Storm Frequency	50-yr
Fire Factor	0
LID	False

Output Results

Modeled (50-yr) Rainfall Depth (in)	5.1
Peak Intensity (in/hr)	2.4397
Undeveloped Runoff Coefficient (Cu)	0.7806
Developed Runoff Coefficient (Cd)	0.8749
Time of Concentration (min)	8.0
Clear Peak Flow Rate (cfs)	1.9851
Burned Peak Flow Rate (cfs)	1.9851
24-Hr Clear Runoff Volume (ac-ft)	0.2948
24-Hr Clear Runoff Volume (cu-ft)	12842.0137

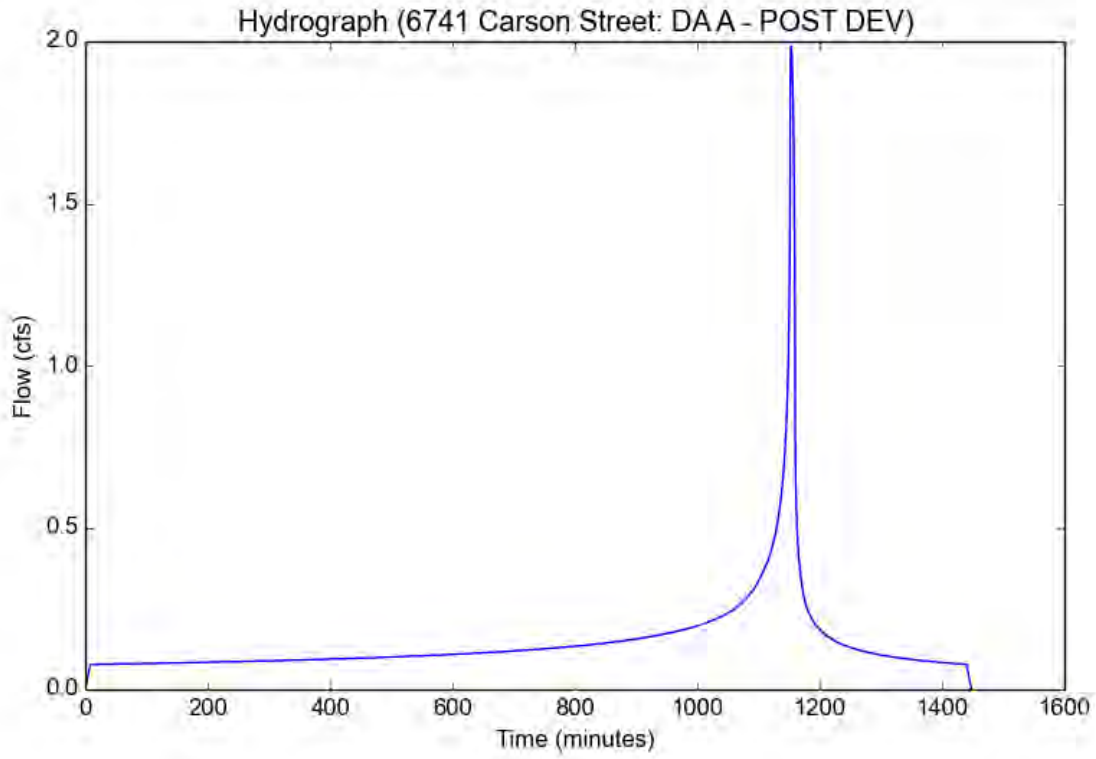

APPENDIX “I”

Noise Study

AUTOMATED CAR WASH
AND AUTO REPAIR CENTER

NOISE IMPACT ANALYSIS

June 14, 2017

Prepared by:

Roma Stromberg, INCE/M.S. ■ Catherine Howe, M.S.
Carl Ballard, LEED GA ■ William Kunzman, P.E.

KUNZMAN ASSOCIATES, INC.
1111 Town & Country Road, Suite 34 ■ Orange, California 92868
5005 La Mart Drive, Suite 201 ■ Riverside, California 92507
(714) 973-8383 ■ www.traffic-engineer.com

JN 6903

TABLE OF CONTENTS

I. INTRODUCTION AND SETTING 1
- A. Purpose and Objectives 1
- B. Project Location 1
- C. Project Description 1

II. NOISE FUNDAMENTALS 4
- A. Noise Fundamentals 4

III. EXISTING NOISE ENVIRONMENT 7
- A. Existing Land Uses and Sensitive Receptors 7
- B. Ambient Noise Measurements 7

IV. REGULATORY SETTING 10
- A. Federal Regulations 10
- B. State Regulations 10
- C. Local Regulations 11

V. ANALYTICAL METHODOLOGY AND MODEL PARAMETERS 13
- A. Noise Modeling and Input 13

VI. IMPACT ANALYSIS 14
- A. Noise Impacts 14

VII. MEASURES TO REDUCE IMPACTS 23
- A. Construction Mitigation Measures 23
- B. Project Operation Mitigation Measures 23

VIII. REFERENCES 24

APPENDICES

Appendix A – List of Acronyms

Appendix B – Definitions of Acoustical Terms

Appendix C – Noise Monitoring Field Worksheets

Appendix D – RCNM Noise Modeling Output

Appendix E – Project Generated Trips FHWA Worksheets

Appendix F – SoundPLAN Input and Output

LIST OF TABLES

Table 1. Short-Term Noise Measurement Summary (dBA) 8
Table 2. Typical Construction Equipment Noise Levels 19
Table 3. Project Average Daily Traffic Volumes and Roadway Parameters 20
Table 4. Change in Existing Noise Levels Along Roadways as a Result of Project (dBA CNEL) ... 21

LIST OF FIGURES

Figure 1. Project Location Map 2
Figure 2. Site Plan 3
Figure 3. Common Noise Sources and Noise Levels 6
Figure 4. Noise Measurement Location Map 9
Figure 5. Operational Noise Levels No Mitigation 22

I. INTRODUCTION AND SETTING

A. Purpose and Objectives

The purpose of this noise impact analysis is to provide an assessment of the impacts resulting from development of the proposed Automated Car Wash and Auto Repair Center project and to identify mitigation measures that may be necessary to reduce those impacts. The noise issues related to the proposed land use and development have been evaluated in the context of the California Environmental Quality Act.

Although this is a technical report, every effort has been made to write the report clearly and concisely. To assist the reader with those terms unique to noise analysis, a glossary of terms is provided in Appendix A of this report.

B. Project Location

The project site (6741 Carson Street) is proposed to be located north of Carson Street between Ostrom Avenue and Los Coyotes Diagonal in the City of Lakewood. A vicinity map showing the project location is provided on Figure 1.

C. Project Description

The proposed project consists of developing the project site with a 3,102 square foot one-story car wash building and a 3,900 square foot one-story car service building. The project site is proposed to include 27 parking spaces. Figure 2 illustrates the site plan.

Figure 1
Project Location Map

Figure 2
Site Plan

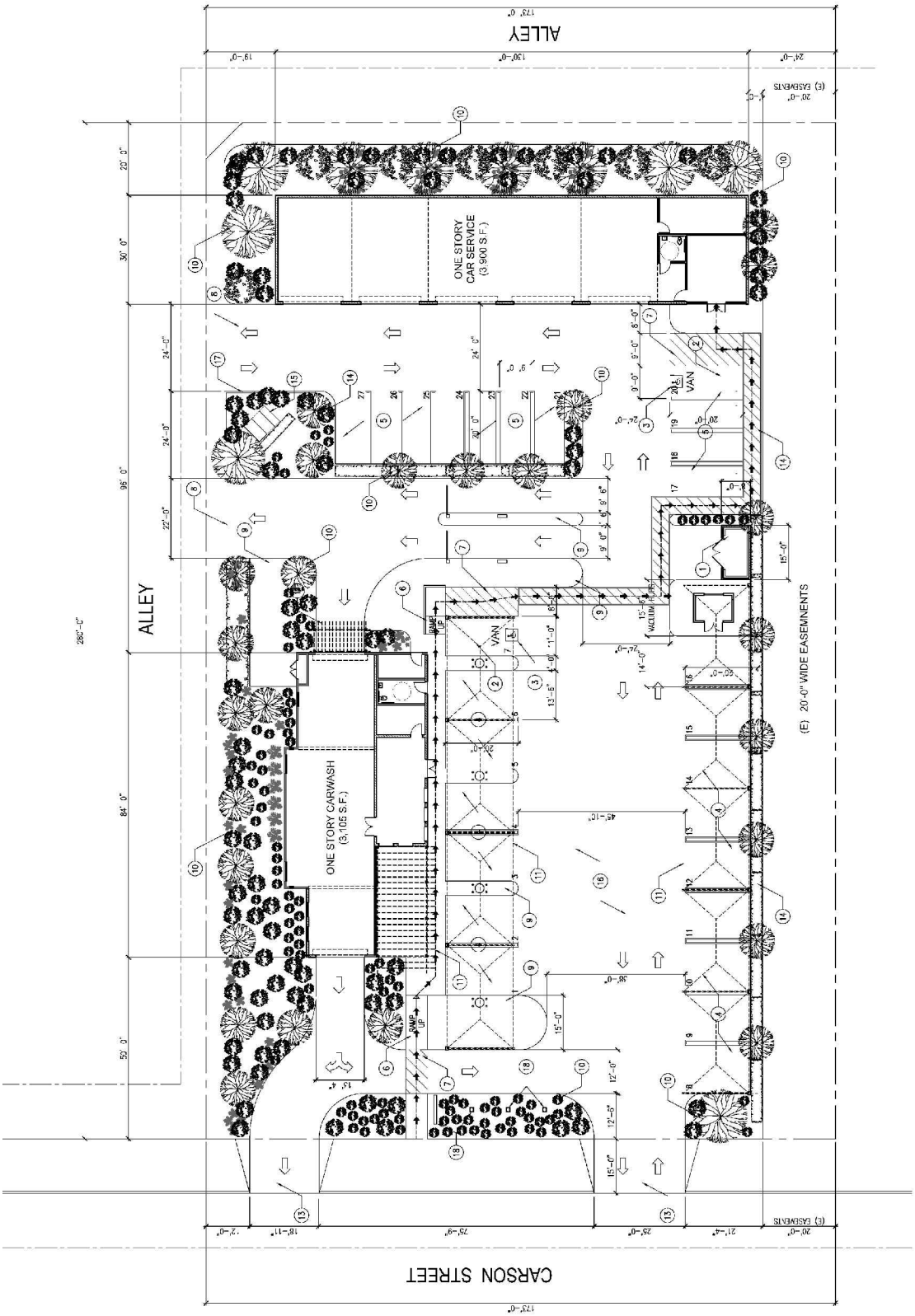

II. NOISE FUNDAMENTALS

A. Noise Fundamentals

Sound is a pressure wave created by a moving or vibrating source that travels through an elastic medium such as air. Noise is defined as unwanted or objectionable sound. The effects of noise on people can include general annoyance, interference with speech communication, sleep disturbance, and in extreme circumstances, hearing impairment.

Commonly used noise terms are presented in Appendix B. The unit of measurement used to describe a noise level is the decibel (dB). The human ear is not equally sensitive to all frequencies within the sound spectrum. Therefore, the "A-weighted" noise scale, which weights the frequencies to which humans are sensitive, is used for measurements. Noise levels using A-weighted measurements are written dB(A) or dBA.

From the noise source to the receiver, noise changes both in level and frequency spectrum. The most obvious is the decrease in noise as the distance from the source increases. The manner in which noise reduces with distance depends on whether the source is a point or line source as well as ground absorption, atmospheric effects and refraction, and shielding by natural and manmade features. Sound from point sources, such as air conditioning condensers, radiates uniformly outward as it travels away from the source in a spherical pattern. The noise drop-off rate associated with this geometric spreading is 6 dBA per each doubling of the distance (dBA/DD). Transportation noise sources such as roadways are typically analyzed as line sources, since at any given moment the receiver may be impacted by noise from multiple vehicles at various locations along the roadway. Because of the geometry of a line source, the noise drop-off rate associated with the geometric spreading of a line source is 3 dBA/DD.

Decibels are measured on a logarithmic scale, which quantifies sound intensity in a manner similar to the Richter scale used for earthquake magnitudes. Thus, a doubling of the energy of a noise source, such as a doubled traffic volume, would increase the noise levels by 3 dBA; halving of the energy would result in a 3 dBA decrease.

Figure 3 shows the relationship of various noise levels to commonly experienced noise events.

Average noise levels over a period of minutes or hours are usually expressed as dBA L_{eq}, or the equivalent noise level for that period of time. For example, $L_{eq(3)}$ would represent a 3-hour average. When no period is specified, a one-hour average is assumed.

Noise standards for land use compatibility are stated in terms of the Community Noise Equivalent Level (CNEL) and the Day-Night Average Noise Level (L_{dn}). CNEL is a 24-hour weighted average measure of community noise. CNEL is obtained by adding five decibels to sound levels in the evening (7:00 PM to 10:00 PM), and by adding ten decibels to sound levels at night (10:00 PM to 7:00 AM). This weighting accounts for the increased human sensitivity to noise during the evening and nighttime hours. L_{dn} is a very similar 24-hour average measure that weights only the nighttime hours.

It is widely accepted that the average healthy ear can barely perceive changes of 3 dBA; that a change of 5 dBA is readily perceptible, and that an increase (decrease) of 10 dBA sounds twice (half) as loud. This definition is recommended by the California Department of Transportation's Traffic Noise Analysis Protocol for New Highway and Reconstruction Projects (2009).

Figure 3
Common Noise Sources and Noise Levels

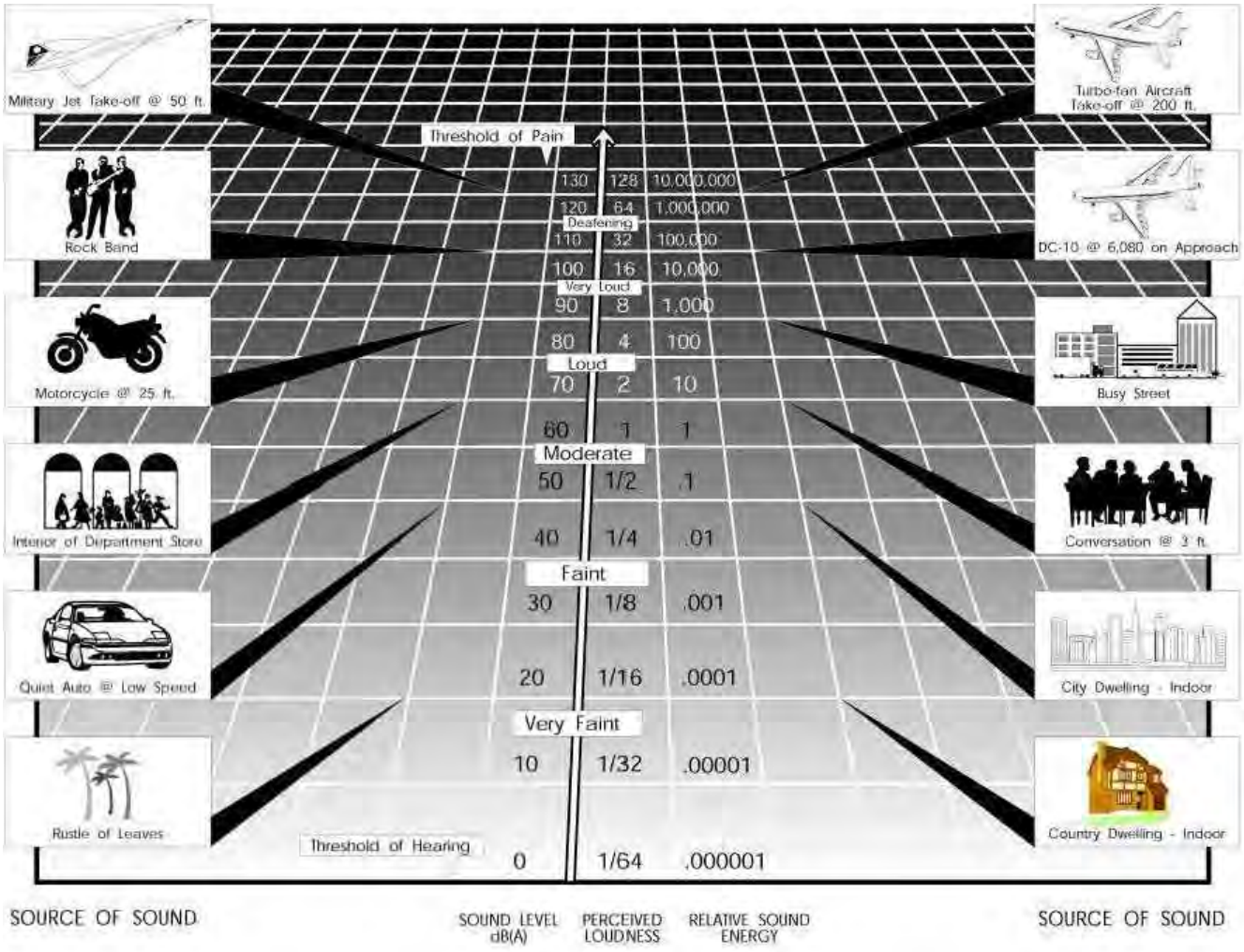

III. EXISTING NOISE ENVIRONMENT

A. Existing Land Uses and Sensitive Receptors

The project site is bordered by Carson Street to the south, single-family detached residential dwelling units to the north and west, and commercial uses to the east. Land uses surrounding the site consist of single-family detached residential dwelling units to the north and west (directly adjacent), Heartwell Golf Course to the south (across Carson Street), and commercial uses to the east. Noise sensitive land uses include the single-family detached residential dwelling units to the north and west.

The State of California defines sensitive receptors as those land uses that require serenity or are otherwise adversely affected by noise events or conditions. Schools, libraries, churches, hospitals, single and multiple-family residential, including transient lodging, motels and hotel uses make up the majority of these areas. Sensitive receptors that may be affected by project generated noise include the single-family detached residential dwelling units to the north and west.

B. Ambient Noise Measurements

An American National Standards Institute (ANSI Section SI4 1979, Type 1) Larson Davis model LxT sound level meter was used to document existing ambient noise levels. In order to document existing ambient noise levels in the project area, two (2) 10-minute daytime noise measurements were taken at 1:51 PM and 2:19 PM on February 28, 2017. Field worksheets and noise measurement output data are included in Appendix C.

As shown on Figure 4, the noise measurements were taken along the single-family detached residential dwelling units that surround the site to the north and west. Table 1 provides a summary of the short-term ambient noise data. Ambient noise levels measured between 46.4 and 60.2 dBA L_{eq} during the daytime (7:00 AM to 10:00 PM). Estimated ambient nighttime noise levels are anticipated to decrease by 5 dBA to between 41.4 and 55.2 dBA L_{eq} during nighttime hours. The dominant noise sources were from vehicles traveling along Carson Street and Quigley Avenue.

Table 1

Short-Term Noise Measurement Summary (dBA)[1, 2]

Daytime								
Site Location	Time Started	Leq	Lmax	Lmin	L(2)	L(8)	L(25)	L(50)
NM1	1:51 PM	60.2	72.2	46.6	66.5	63.8	61.3	58.4
NM2	2:09 PM	46.4	56.7	40.9	51.8	49.4	46.7	45.2

[1] See Figure 4 for noise measurement locations. Each noise measurement was performed over a 10-minute duration.

[2] Noise measurements performed on February 28, 2017.

Figure 4
Noise Measurement Location Map

IV. REGULATORY SETTING

A. Federal Regulations

1. Federal Noise Control Act of 1972

The U.S. Environmental Protection Agency (EPA) Office of Noise Abatement and Control was originally established to coordinate federal noise control activities. After its inception, EPA's Office of Noise Abatement and Control issued the Federal Noise Control Act of 1972, establishing programs and guidelines to identify and address the effects of noise on public health, welfare, and the environment. In response, the EPA published Information on Levels of Environmental Noise Requisite to Protect Public Health and Welfare with an Adequate Margin of Safety (Levels of Environmental Noise). The Levels of Environmental Noise recommended that the Ldn should not exceed 55 dBA outdoors or 45 dBA indoors to prevent significant activity interference and annoyance in noise-sensitive areas.

In addition, the Levels of Environmental Noise identified five (5) dBA as an "adequate margin of safety" for a noise level increase relative to a baseline noise exposure level of 55 dBA Ldn (i.e., there would not be a noticeable increase in adverse community reaction with an increase of five dBA or less from this baseline level). The EPA did not promote these findings as universal standards or regulatory goals with mandatory applicability to all communities, but rather as advisory exposure levels below which there would be no risk to a community from any health or welfare effect of noise.

In 1981, EPA administrators determined that subjective issues such as noise would be better addressed at lower levels of government. Consequently, in 1982 responsibilities for regulating noise control policies were transferred to State and local governments. However, noise control guidelines and regulations contained in EPA rulings in prior years remain in place by designated Federal agencies, allowing more individualized control for specific issues by designated Federal, State, and local government agencies.

B. State Regulations

1. State of California General Plan Guidelines 2003

Though not adopted by law, the State of California General Plan Guidelines 2003, published by the California Governor's Office of Planning and Research (OPR) (OPR Guidelines), provide guidance for the compatibility of projects within areas of specific noise exposure. The OPR Guidelines identify the suitability of various types of construction relative to a range of outdoor noise levels and provide each local community some flexibility in setting local noise standards that allow for the variability in community preferences. Findings presented in the Levels of Environmental Noise Document (EPA 1974) influenced the recommendations of the OPR Guidelines, most importantly in the choice of noise exposure metrics (i.e., Ldn or CNEL) and in the upper limits for the Normally Acceptable outdoor exposure of noise-sensitive uses. The City

of Lakewood has adopted General Plan goals, policies and implementation measures to ensure land use compatibility.

2. California Environmental Quality Act

The California Environmental Quality Act Guidelines (Appendix G) establishes thresholds for noise impact analysis. Two of these standards apply to what is referred to as a "substantial increase" in ambient noise levels. Neither the California Environmental Quality Act nor the City of Lakewood General Plan Noise Element recognizes an official numerical increase as a "substantial increase." Industry-accepted standards for what is considered to be a "substantial increase" range from 3 dB to 12 dB. It should be noted that a change of 3 dB is considered to be "barely perceptible" to a trained ear and that a change of 5 dB is considered to be a readily perceptible change.

For purposes of this analysis, the following threshold was used to evaluate the project's potential to result in substantial increases in ambient noise levels.

Roadway noise impacts would be considered significant if the project increases noise levels at a noise sensitive land use by 3 dBA CNEL and if: (1) the existing noise levels already exceed the State of California's residential land use compatibility criteria for "clearly compatible" (60 dBA CNEL), or (2) the project increases noise levels from below the 60 dBA CNEL criteria to above 60 dBA CNEL.

C. Local Regulations

1. City of Lakewood General Plan

Applicable policies and standards governing environmental noise in the City are set forth in the General Plan Noise Element. The applicable goal, policy and program implementation measure are presented below:

Goal: Maintain or reduce noise levels throughout the city.

Policy: Ensure that new and expanded commercial projects do not generate adverse noise impacts on adjacent residential areas.

Program: Require that new commercial or industrial projects or proposed expansions of existing commercial and industrial uses which abut residential uses provide noise barriers to protect residents.

2. City of Lakewood Municipal Ordinance

Section 9376. Air conditioners, Mechanical Equipment and Machinery noise in residential areas. No person within any area of the City zoned for residential use or any area adjacent thereto shall own, possess, control, or maintain any machinery, equipment, pumps, fans, air conditioning or air-handling apparatus, or similar mechanical devices which cause the noise level at the property line of any property

zoned for residential uses to exceed the sound pressure level permitted herein by more than five decibels. The production or maintenance of any sound in excess of said levels is hereby declared to be an unnecessary interference with the enjoyment of residential property and contrary to the public health and general welfare. The ownership, maintenance, operation, or control of any such machinery or equipment producing said excess sound pressure levels is hereby declared to be a public nuisance.

Section 9376.1. Same: Decibel Measurement Criteria. The sound pressure level permitted herein shall be measured at any point on the property line of the residential property affected and is sixty decibels, reference 0.002 microbar, read on the A scale of a sound level meter. For the purposes of this study, Section 9376 is interpreted to prohibit the project from generating a noise level that exceeds 65 dBA Leq at any residential property line.

Section 8019 Permitted Hours of Construction. No person shall engage in any act of grading, construction, reconstruction, or demolition, including but not limited to the use of any air compressors; jackhammers; power-driven drill; riveting machine; excavator; diesel-powered truck, tractor, or other earth moving equipment; or any machine, tool, device, or equipment which makes loud noises to the disturbance of persons occupying sleeping quarters in a dwelling, apartment, hotel, mobile home, or other place of residence, except during the hours of 7:00 AM to 7:00 PM, Monday through Saturday; and 9:00 AM to 7:00 PM, Sunday.

V. ANALYTICAL METHODOLOGY AND MODEL PARAMETERS

A. Noise Modeling and Input

1. Road Construction Model

A worst-case construction noise scenario was modeled using a version of the Federal Highway Administration's Roadway Construction Noise Model (RCNM). RCNM utilizes standard noise emission levels for many different types of equipment and includes utilization percentage, impact, and shielding parameters. Noise modeling input parameters and output are provided in Appendix D.

2. Federal Highway Administration (FHWA) Traffic Noise Prediction Model

Existing, Existing Plus Project noise levels on Los Coyotes Diagonal, Carson Street, and other affected nearby road segments were modeled utilizing the FHWA Traffic Noise Prediction Model FHWA-RD-77-108 in order to quantify the proposed project's contribution to increases in ambient noise levels.

The FHWA Traffic Noise Prediction Model arrives at a predicted noise level through a series of adjustments to the Reference Energy Mean Emission Level (REMEL). Adjustments are then made to the REMEL to account for: total average daily trips (ADT), roadway classification, width, speed and truck mix, roadway grade and site conditions (hard or soft ground surface). Surfaces adjacent to all modeled roadways were assumed to have a "hard site" to predict worst-case, conservative noise levels. A hard site, such as pavement, is highly reflective and does not attenuate noise as quickly as grass or other soft sites. Possible reductions in noise levels due to intervening topography and buildings were not accounted for in this analysis.

Existing and Existing Plus Project vehicle mix were obtained from the project's Traffic Impact Analysis (Translutions Inc. 2017). Vehicle/truck mixes and D/E/N splits for use in acoustical studies published by the Riverside County Department of Industrial Hygiene were utilized for noise modeling. Existing Plus Project vehicle mixes were calculated by adding the proposed project trips to existing conditions. FHWA Spreadsheets are included in Appendix E.

3. SoundPLAN

The SoundPLAN acoustical modeling software was utilized to model project operational worst-case stationary noise impacts from the proposed project to adjacent sensitive uses (e.g., residences). SoundPLAN is capable of evaluating stationary noise sources (e.g., parking lots, drive-thru menus, car wash equipment, vacuums, etc.) and much more. The SoundPLAN software utilizes algorithms (based on the inverse square law) to calculate noise level projections. The software allows the user to input specific noise sources, spectral content, sound barriers, building placement, topography, and sensitive receptor locations. Noise modeling input and outputs assumptions are indicated in Appendix F.

VI. IMPACT ANALYSIS

A. Noise Impacts

This impact discussion analyzes the potential for project construction noise and operational noise to cause an exposure of person to or generation of noise levels in excess of established City of Lakewood noise standards related to construction noise, transportation, and stationary related noise impacts caused by the proposed project.

1. Construction Noise

Construction noise is considered a short-term impact and would be considered significant if construction activities are undertaken outside the allowable times as described by the City's Municipal Code Section 8019. Existing single-family detached residential dwelling units to the north and west may be temporarily affected by short-term noise impacts associated the transport of workers, the movement of construction materials to and from the project site, ground clearing, excavation, grading, and building activities. The noise analysis reviews the construction noise levels during the various phases of the project.

Typical noise sources and noise levels associated with the site grading phase of construction are shown in Table 2. Demolition and site preparation are expected to produce the highest sustained construction noise levels. Typical operating cycles for these types of construction equipment may involve one or two minutes of full power operation followed by three to four minutes at lower power settings. A likely worst-case construction noise scenario during grading assumes the use of a grader, a dozer, a water truck (modeled as a dump truck), an excavator, and a backhoe operating between 25 and 200 feet from the property line. Assuming a usage factor of 40 percent for each piece of equipment, unmitigated noise levels have the potential to reach 87.3 dBA L_{eq} and 91.0 dBA L_{max} at the property line demolition and site preparation. RCNM worksheets are provided as Appendix D.

Section 8019 of the City of Lakewood Municipal Ordinance limits construction to between the hours of 7:00 AM to 7:00 PM Monday through Saturday and 9:00 AM to 7:00 PM on Sunday. Construction is anticipated to occur during the permissible hours according the City's Municipal Code. Construction noise will have a temporary or periodic increase in the ambient noise levels above the existing within the project vicinity. As stated earlier, any construction activities that occur outside the allowable time would be considered significant. Adherence to these hours for construction activities, and implementation of the measures presented in Section VII of this report, will reduce construction noise impacts.

2. Noise Impacts to Off-Site Receptors Due to Project Generated Trips

A worst-case project generated traffic noise level was modeled utilizing the FHWA Traffic Noise Prediction Model - FHWA-RD-77-108. Traffic noise levels were calculated 50 feet from the centerline of the analyzed roadway. The modeling is theoretical and

does not take into account any existing barriers, structures, and/or topographical features that may further reduce noise levels. Therefore, the levels are shown for comparative purposes only to show the difference in with and without project conditions. Roadway input parameters including average daily traffic volumes (ADTs) (Albert A. Webb Associates, 2017), speeds, and vehicle distribution data are shown in Table 3. The potential off-site noise impacts caused by an increase of traffic volumes from operation of the proposed project on the nearby roadways were calculated for the following scenarios:

Existing Year (without Project): This scenario refers to existing year traffic noise conditions and is demonstrated in Table 4.

Existing Year (Plus Project): This scenario refers to existing year traffic noise conditions and is demonstrated in Table 4.

As shown in Table 4, modeled Existing traffic noise levels range between 68.5-76.63 dBA CNEL and the modeled Existing Plus Project traffic noise levels range between 68.53-76.64 dBA CNEL at 50 feet from the centerline of each modeled road segment. As stated previously, a substantial increase would require an increase of 3 dBA CNEL as well as either an existing exceedance of the State of California Land Use Compatibility criteria for normally acceptable noise levels or an increase in noise levels from below the 60 dBA CNEL criteria to above the 60 dBA CNEL criteria.

Table 4 shows that all modeled roadway segments are anticipated to change the noise a nominal amount (approximately 0.01 to 0.03 dBA CNEL). Therefore, a change in noise level would not be audible and would be considered less than significant. No mitigation is required.

3. Noise Impacts to Off-site Receptors Due to On-Site Operational Noise

Sensitive receptors that may be affected by project operational noise include the single-family detached residential dwelling units to the north and west. The worst-case stationary noise was modeled utilizing the SoundPLAN model. Modeled noise sources include parking lot noise, car wash noise, and pneumatic tools associated with the proposed car service center.

Parking Lot

Parking lot noise typically includes periods of conversation, doors slamming, engines starting and stopping and vehicle passage. The number of parking movements associated with peak hour trip generation was input to SoundPLAN. The software utilizes this information to calculate the projected Leq from each parking area. Based on the Traffic Impact Analysis prepared for the proposed project, the proposed project is expected to result in approximately 56 peak hour vehicle trips. Parking lot noise varies depending upon size and type of the proposed land use.

Car Service Building (Tire Store)

The tire store will generate noise associated with the operation of an air compressor, air impact wrenches, car lifts, tire balancer machines and a variety of hand tools. Noise references levels taken at a similar facility were utilized to model a likely peak hour tire store scenario. The cumulative noise reference level 80.6 dB was utilized to model peak hour noise in each of the proposed bays.

Car Wash

Sound data provided by the manufacturer, evaluated in light of representative car wash noise measurements taken at a similar type of facility (Kunzman Associates, Inc. 2013), was utilized in the SoundPLAN model to model the propagation of car wash noise. The modeled noise level at the entrance opening of the drive-thru car wash was 89.0 dBA L_{eq} and noise at the exit opening of the car wash was modeled at 80.0 dB L_{eq} to represent the Whisper Drying System.

Vacuum System

The vacuum equipment that makes the majority of the noise will be housed in two separate structures. One system will be housed in the car wash building and another will be housed in a structure proposed along the eastern property line. A hose system will extend from these housed systems and hose ends will be available within the parking/vacuum area.

Sensitive Receptors

Sensitive receptors were modeled to accurately evaluate the proposed project's operational noise impact. A receptor is denoted by a yellow dot.

Figure 5 shows the future unmitigated operational noise levels at the property lines and nearby sensitive receptors. Operational noise levels are expected to range between 43 to 60 dBA Leq at the nearest sensitive receptors. These noise level projections will not exceed the City's noise standard for sensitive receptors of 65 dBA Leq. These findings assume however, that the western side of the car wash is solid with no windows, holes or openings and that the Whisper Drying System is installed. No other mitigation is required.

4. CEQA Checklist Appendix G Analysis

This section evaluates project impacts in light of the California Environmental Quality Act Appendix G Guidelines and the thresholds set forth therein and presented below.

a) Would the project expose persons to or generation of noise levels in excess of standards established in the local general plan or noise ordinance, or applicable standards of other agencies?

As stated above and shown in Figure 5, project operational noise is expected to range between 43 to 60 dBA Leq at the nearest sensitive receptors as designed, and will not exceed the City's applicable noise standard of 65 dBA L_{eq}. Impacts associated with operational noise would be less than significant.

b) Would the project expose persons to or generation of excessive groundborne vibration or groundborne noise levels?

Operation of some construction equipment can result in vibration levels that are annoying and/or may cause structural damage to nearby buildings depending on the type of equipment and the proximity to the sensitive receptors. Specifically, annoyance may occur when a peak particle velocity (PPV) of 0.20 is reached, and structural damage may occur when the PPV reaches between 0.4 and 0.6 PPV (Caltrans 2002). The most vibratory piece of equipment expected to be utilized on the project site is a large bull-dozer which can generate approximately 0.089 PPV at a distance of 25 feet or approximately 0.124 PPV at the nearest sensitive receptor which is approximately 20 feet from the project site. Annoyance and/or structural damage associated with project construction is not expected. There is no equipment associated with the proposed car wash and/or auto repair facility that is expected to cause ground borne vibration that is perceptible at nearby sensitive receptors. The project would not expose persons to or generate excessive groundborne vibration noise levels at sensitive receptors. The impact associated with groundborne vibration is less than significant.

c) Would the project result in a substantial permanent increase in ambient noise levels in the project vicinity above levels existing without the project?

<u>Increase Associated with Project Generated Vehicle Traffic</u>

As shown in Table 4, project generated vehicle traffic is not expected to increase existing ambient noise by more than 0.03 dBA CNEL. This increase would not be perceptible. Impacts associated with project generated vehicle traffic would be less than significant.

<u>Increase Associated with Operation of the Proposed Project</u>

As shown in Figure 5, project operational noise is expected range between 43 to 60 dBA Leq at the nearest sensitive receptors. Ambient noise levels in the project area were measured between 46 and 60 dBA $L_{eq.}$ Project operations would not result in substantial increases in ambient noise levels. Impacts would be less than significant.

d) Would the project result in a substantial temporary or periodic increase in ambient noise levels in the project vicinity above levels existing without the project?

Construction noise will result in temporary increase in the ambient noise levels. Section 8019 of the City of Lakewood Municipal Ordinance limits construction to between the hours of 7:00 AM to 7:00 PM Monday through Saturday and 9:00 AM to 7:00 PM on Sunday. The City has adopted this regulation specifically to control construction noise. Adherence to these allowed hours for construction, and implementation of the measures presented in Section VII of this report, will reduce construction noise impacts. Impacts associated with the temporary increases in ambient noise levels associated with project construction would be less than significant with adherence to the City's Municipal Code and implementation of mitigation.

e) For a project located within an airport land use plan or, where such a plan has not been adopted, within two miles of a public airport or public use airport, would the project expose people residing or working in the project area to excessive noise levels?

The proposed project is not within an airport land use plan area or within 2 miles of an airport. The project would not result in impacts associated with public airport related noise.

f) For a project located within the vicinity of a private airstrip, would the project expose people residing or working in the project area to excessive noise levels?

The proposed project is not within the vicinity of a private airport. The project would not result in impacts associated with private airport related noise.

Table 2

Typical Construction Equipment Noise Levels[1]

Type of Equipment	Range of Maximum Sound Levels Measured (dBA at 50 feet)	Suggested Maximum Sound Levels for Analysis (dBA at 50 feet)
Rock Drills	83-99	96
Jack Hammers	75-85	82
Pneumatic Tools	78-88	85
Pumps	74-84	80
Dozers	77-90	85
Scrappers	83-91	87
Haul Trucks	83-94	88
Cranes	79-86	82
Portable Generators	71-87	80
Rollers	75-82	80
Tractors	77-82	80
Front-End Loaders	77-90	86
Hydraulic Excavators	81-90	86
Graders	79-89	86
Air Compressors	76-89	86
Trucks	81-87	86

[1] Source: Bolt, Beranek & Newman; Noise Control for Buildings and Manufacturing Plants, 1987.

Table 3

Project Average Daily Traffic Volumes and Roadway Parameters

Roadway	Segment	Average Daily Traffic Volume		Posted Travel Speeds (MPH)
		Existing	Existing Plus Project	
Los Coyotes Diagonal	North of Carson Street	5,160	5,250	35
	South of Carson Street	17,490	17,580	40
Carson Street	East of Los Coyotes Diagonal	27,930	28,040	40
	West of Los Coyotes Diagonal	23,300	23,600	40

Vehicle Distribution (Truck Mix)[2]			
Motor-Vehicle Type	Daytime % (7 AM - 7 PM)	Evening % (7 PM - 10 PM)	Night % (10 PM - 7 AM)
Automobiles	75.5	14.0	10.4
Medium Trucks	48.0	2.0	50.0
Heavy Trucks	48.0	2.0	50.0

[1] Average daily traffic volumes derived by Albert A. Webb Associates Traffic Engineers from the Lakewood Car Wash Traffic Study prepared by Translutions, Inc. (June 2017).

[2] Vehicle percentages are based on the Riverside County Industrial Hygiene Letter for Traffic Noise.

Table 4

Change in Existing Noise Levels Along Roadways as a Result of Project (dBA CNEL)[1]

Roadway	Segment	Modeled Noise Levels (dBA CNEL) @ 50 feet from centerline				
		Existing Without Project	Existing Plus Project	Change in Noise Level	Exceeds Standards	Potential Significant Impact
Los Coyotes Diagonal	North of Carson Street	68.50	68.53	0.03	YES	NO
	South of Carson Street	74.60	74.61	0.01	YES	NO
Carson Street	East of Los Coyotes Diagonal	76.63	76.64	0.01	YES	NO
	West of Los Coyotes Diagonal	75.84	75.86	0.02	YES	NO

[1] Exterior noise levels calculated 5-feet above pad elevation, perpendicular to subject roadway.

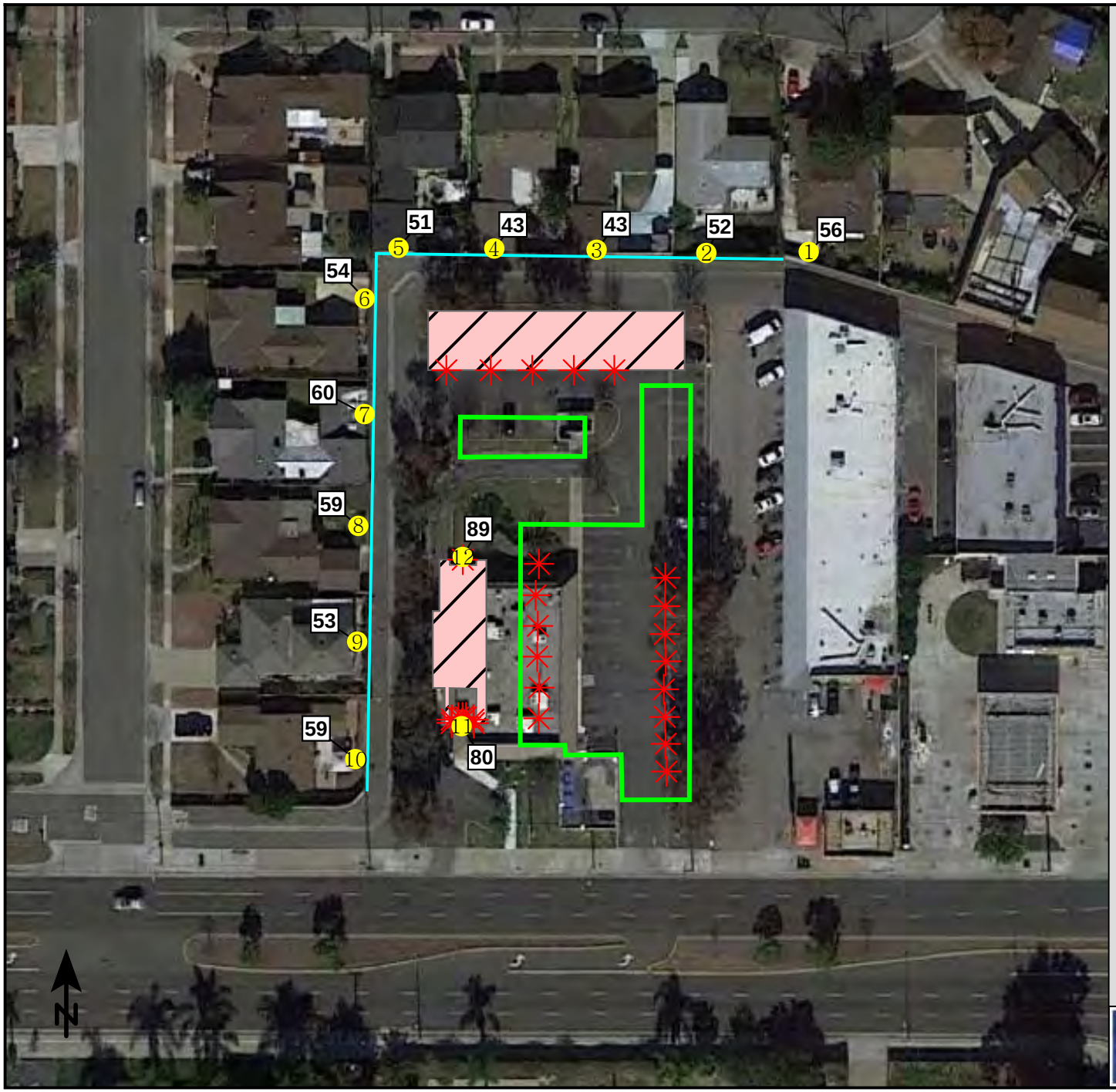

Figure 5

Operational Noise Levels

Automotive Service and Car Wash with Whisper Drying System

Signs and symbols

- Existing Wall
- Proposed Buildings - West side of Car wash is solid construction providing an STC of at least 20 dB with no windows
- Receiver
- Car Wash noise source height-4.5 to 9 ft
  Car Wash SPL at entrance-89 dB Leq
  Car Wash at exit- 80 dB Leq
  Car Service source height-1.5 feet
  Car Service SPL at opening-66 dBA Leq
  Vacuum Hose Ends- 65 dBA Leq
- Proposed Parking Areas
- Noise Levels

1 : 75

0 20 40 80 120 160 feet

KUNZMAN ASSOCIATES, INC.
OVER 40 YEARS OF EXCELLENT SERVICE

VII. MEASURES TO REDUCE IMPACTS

A. Construction Mitigation Measures

In addition to adherence to the City of Lakewood's policies found in the Noise Element and Municipal Code limiting the construction hours of operation, the following measures are recommended to reduce construction noise emanating from the proposed project:

1. During all project site excavation and grading on-site, construction contractors shall equip all construction equipment, fixed or mobile, with properly operating and maintained mufflers, consistent with manufacturer standards.

2. The contractor shall place all stationary construction equipment so that emitted noise is directed away from the noise sensitive receptors nearest the project site.

3. Equipment shall be shut off and not left to idle when not in use.

4. The contractor shall locate equipment staging in areas that will create the greatest distance between construction-related noise sources and sensitive receptors nearest the project site during all project construction.

5. In order to minimize construction noise levels it is recommended that a temporary barrier, sufficient in height to block the line of sight between first and second story windows of adjacent single-family detached residential dwelling units (as applicable) and construction equipment shall be placed along the northern and western property lines during project construction.

B. Project Operation Mitigation Measures

1. The western side of the car wash must be solid with no windows, holes or openings.

2. The Whisper Drying System or a drying system with a noise level of 80 dB at the exit of the car wash shall be used. After installation, the noise level of the installed equipment shall be verified by an experienced acoustical professional utilizing a Type 1 or Type 2 precision noise meter. Their findings shall be provided in a letter report and shall be submitted to the City Building and Safety Division prior to final inspection.

3. All vacuum equipment shall be housed in buildings that can provide for a closed door condition. The vacuum systems shall be kept in rooms with no exterior facing windows. Vacuum hoses and hose ends are an exception to this requirement.

4. The openings of all rooftop vents associated with buildings that house car wash and/or vacuum equipment shall be slanted away from nearby residential land uses to the greatest degree possible.

VIII. REFERENCES

Albert A. Webb Associates

2017b Email correspondence. June 5. Average Daily Trip data derived from Lakewood Car Wash Study prepared by Translutions, Inc. (2017)

Bolt, Beranek & Newman

1987 Noise Control for Buildings and Manufacturing Plants.

Environmental Protection Agency

1974 "Information on Levels of Environmental Noise Requisite to Protect Public Health And Welfare with an Adequate Margin of Safety," EPA/ONAC 550/9-74-004, March, 1974.

Harris, Cyril M.

1991 Handbook of Acoustical Measurement and Noise Control. Acoustical Society of America. Woodbury, N.Y.

Kunzman Associates, Inc.

2013 Green Forest Car Wash Noise Impact Analysis. April 30.

Lakewood, City of

1996 General Plan Noise Element

2008 Municipal Code

Office of Planning and Research

2003 State of California General Plan Guidelines

Translutions, Inc.

2017a Lakewood Car Wash Traffic Study. June.

APPENDICES

Appendix A – List of Acronyms

Appendix B – Definitions of Acoustical Terms

Appendix C – Noise Monitoring Field Worksheets

Appendix D – RCNM Noise Modeling Output

Appendix E – Project Generated Trips FHWA Worksheets

Appendix F – SoundPLAN Input and Output

APPENDIX A

List of Acronyms

Term	Definition
ADT	Average Daily Traffic
ANSI	American National Standard Institute
CEQA	California Environmental Quality Act
CNEL	Community Noise Equivalent Level
D/E/N	Day / Evening / Night
dB	Decibel
dBA or dB(A)	Decibel "A-Weighted"
dBA/DD	Decibel per Double Distance
dBA L_{eq}	Average Noise Level over a Period of Time
EPA	Environmental Protection Agency
FHWA	Federal Highway Administration
L_{02},L_{08},L_{50},L_{90}	A-weighted Noise Levels at 2 percent, 8 percent, 50 percent, and 90 percent, respectively, of the time period
L_{dn}	Day-Night Average Noise Level
$L_{eq(x)}$	Equivalent Noise Level for '"x" period of time
L_{eq}	Equivalent Noise Level
L_{max}	Maximum Level of Noise (measured using a sound level meter)
L_{min}	Minimum Level of Noise (measured using a sound level meter)
LOS C	Level of Service C
OPR	California Governor's Office of Planning and Research
PPV	Peak Particle Velocities
RCNM	Road Construction Noise Model
REMEL	Reference Energy Mean Emission Level
RMS	Root Mean Square

APPENDIX B

Definitions of Acoustical Terms

Term	Definition
Decibel, dB	A logarithmic unit of noise level measurement that relates the energy of a noise source to that of a constant reference level; the number of decibels is 10 times the logarithm (to the base 10) of this ratio.
Frequency, Hertz	In a function periodic in time, the number of times that the quantity repeats itself in one second (i.e., the number of cycles per second).
A-Weighted Sound Level, dBA	The sound level obtained by use of A-weighting. The A-weighting filter de-emphasizes the very low and very high frequency components of the sound in a manner similar to the frequency response of the human ear.
Root Mean Square (RMS)	A measure of the magnitude of a varying noise source quantity. The name derives from the calculation of the square root of the mean of the squares of the values. It can be calculated from either a series of lone values or a continuous varying function.
Fast/Slow Meter Response	The fast and slow meter responses are different settings on a sound level meter. The fast response setting takes a measurement every 100 milliseconds, while a slow setting takes one every second.
L_{02}, L_{08}, L_{50}, L_{90}	The A-weighted noise levels that are equaled or exceeded by a fluctuating sound level, 2 percent, 8 percent, 50 percent, and 90 percent of a stated time period, respectively.
Equivalent Continuous Noise Level, L_{eq}	A level of steady state sound that in a stated time period, and a stated location, has the same A-weighted sound energy as the time-varying sound.
L_{max}, L_{min}	L_{max} is the RMS (root mean squared) maximum level of a noise source or environment measured on a sound level meter, during a designated time interval, using fast meter response. L_{min} is the minimum level.
Ambient Noise Level	The all-encompassing noise environment associated with a given environment, at a specified time, usually a composite of sound from many sources, at many directions, near and far, in which usually no particular sound is dominant.
Offensive/ Offending/ Intrusive Noise	The noise that intrudes over and above the existing ambient noise at a given location. The relative intrusiveness of sound depends on its amplitude, duration, frequency, and time of occurrence, and tonal information content as well as the prevailing ambient noise level.

APPENDIX C

Noise Monitoring Field Worksheets

Noise Measurement
Field Data

Project Name:	**Automated Car Wash and Auto Repair Center**	Date:	28-Feb-17
Project #:	6903		
Noise Measurement #:	NM1 **3099 LxT_Data152 .xlsx**	Technician:	**Ian Edward Gallagher**
Nearest Address or Cross Street:	**Ostrom Avenue & Carson Street**		
Site Description (Type of Existing Land Use and any other notable features)	**Residential**		
Weather:	Mostly clear sunny sky	**Settings:**	**SLOW** **FAST** (Circle one)
Temperature: 64 deg F	**Wind: 3 to 5 mph** **Humidity:** 34%	**Terrain:**	**FLAT**
Start Time:	**1:51 PM** **End Time:** **2:01 PM**	**Run Time:**	**10 MIN**

Leq:	60.2 **dB**	**Primary Noise Source:**	**Traffic along Carson Street**
Lmax	72.2 **dB**		
L2	66.5 **dB**	**Secondary Noise Sources:**	Bird song, occasional overhead aitcraft, residentilal ambiance.
L8	63.8 **dB**		**Occasional traffic along Ostrom Ave**
L25	61.3 **dB**		
L50	58.4 **dB**		

NOISE METER:	SoundTrack LxT Class 1	**CALIBRATOR:**	Larson Davis CAL250 Acoustic Calibrator
MAKE:	Larson Davis	**MAKE:**	Larson Davis
MODEL:	LxT1	**MODEL:**	Cal250
SERIAL NUMBER:	3099	**SERIAL NUMBER:**	2723
FACTORY CALIBRATION DATE:	11/4/2014	**FACTORY CALIBRATION DATE:**	11/3/2014
FIELD CALIBRATION DATE:	2/28/2017		

KUNZMAN ASSOCIATES, INC.
OVER 40 YEARS OF EXCELLENT SERVICE

Noise Measurement
Field Data

Additional Notes/Sketch

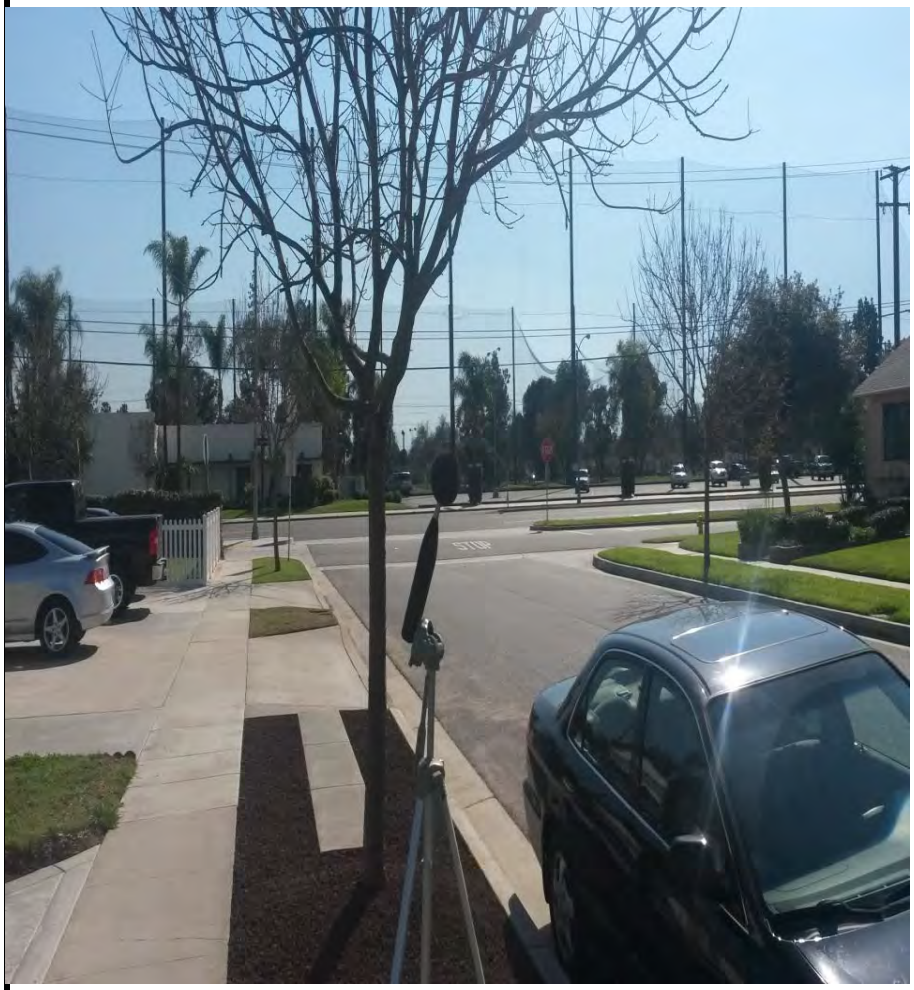

NM1 looking South towards Carson Street

NM1 looking East towards residence

Summary						
File Name	LxT_Data.152					
Serial Number	0003099					
Model	SoundTrack LxT®					
Firmware Version	2.301					
User	Ian Edward Gallagher					
Location	NM1 JN6903					
Job Description	1min noise measurement					
Start	2017-02-28 13:51:16					
Stop	2017-02-28 14:01:16					
Duration	0:10:00.0					
Run Time	0:10:00.0					
Pause	0:00:00.0					
Pre Calibration	2017-02-28 13:50:20					
Post Calibration	None					
Calibration Deviation	---					
Overall Settings						
RMS Weight	A Weighting					
Peak Weight	Z Weighting					
Detector	Slow					
Preamp	PRMLxT1L					
Microphone Correction	Off					
Integration Method	Linear					
OBA Range	Low					
OBA Bandwidth	1/1 and 1/3					
OBA Freq. Weighting	Z Weighting					
OBA Max Spectrum	Bin Max					
Overload	121.9 dB					
Results						
LAeq	60.2 dB					
LAE	88.0 dB					
EA	70.177 µPa²h					
EA8	3.368 mPa²h					
EA40	16.842 mPa²h					
LZpeak (max)	2017-02-28 13:53:45	98.7 dB	**Statistics**			
LASmax	2017-02-28 13:57:13	72.2 dB	**LAS2.00**	66.5 dB		
LASmin	2017-02-28 13:58:23	46.6 dB	**LAS8.00**	63.8 dB		
SEA	-99.9 dB		**LAS25.00**	61.3 dB		
			LAS50.00	58.4 dB		
LCeq	70.1 dB		**LAS66.60**	56.2 dB		
LAeq	60.2 dB		**LAS90.00**	50.8 dB		
LCeq - LAeq	9.9 dB					
LAIeq	62.0 dB					
LAeq	60.2 dB					
LAIeq - LAeq	1.8 dB					
# Overloads	0					

Noise Measurement
Field Data

Project Name:	**Automated Car Wash and Auto Repair Center**	Date:	28-Feb-17
Project #:	6903		
Noise Measurement #:	NM2 **3099 LxT_Data153 .xlsx**	Technician:	**Ian Edward Gallagher**
Nearest Address or Cross Street:	**Ostrom Avenue & Quigley Ave**		
Site Description (Type of Existing Land Use and any other notable features)	**Residential**		
Weather:	Mostly clear sunny sky	**Settings:**	**SLOW** **FAST** (Circle one)
Temperature: 64 deg F	**Wind: 3 to 5 mph** **Humidity:** 34%	**Terrain:**	**FLAT**
Start Time:	**2:09 PM** **End Time:** **2:19 PM**	**Run Time:**	**10 MIN**

Leq:	46.4 **dB**	**Primary Noise Source:**	**Occasional traffic along Quigley Avenue**
Lmax	56.7 **dB**		
L2	51.8 **dB**	**Secondary Noise Sources:**	Bird song, occasional overhead aitcraft, residentilal ambiance.
L8	49.4 **dB**		**Traffic ambiance from Carson Street**
L25	46.7 **dB**		
L50	45.2 **dB**		

NOISE METER:	SoundTrack LxT Class 1	**CALIBRATOR:**	Larson Davis CAL250 Acoustic Calibrator
MAKE:	Larson Davis	**MAKE:**	Larson Davis
MODEL:	LxT1	**MODEL:**	Cal250
SERIAL NUMBER:	3099	**SERIAL NUMBER:**	2723
FACTORY CALIBRATION DATE:	11/4/2014	**FACTORY CALIBRATION DATE:**	11/3/2014
FIELD CALIBRATION DATE:	2/28/2017		

KUNZMAN ASSOCIATES, INC.
OVER 40 YEARS OF EXCELLENT SERVICE

Noise Measurement
Field Data

Additional Notes/Sketch

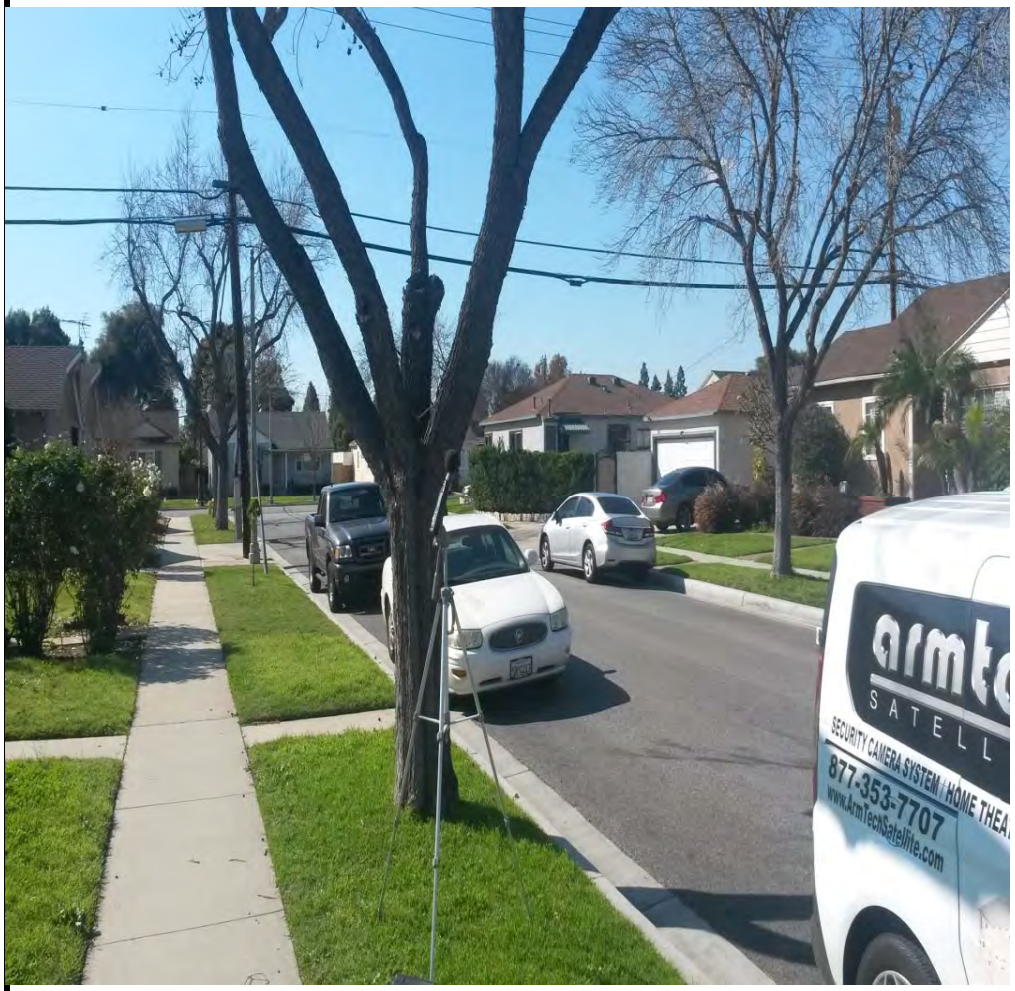

NM2 looking West down Quigley Street

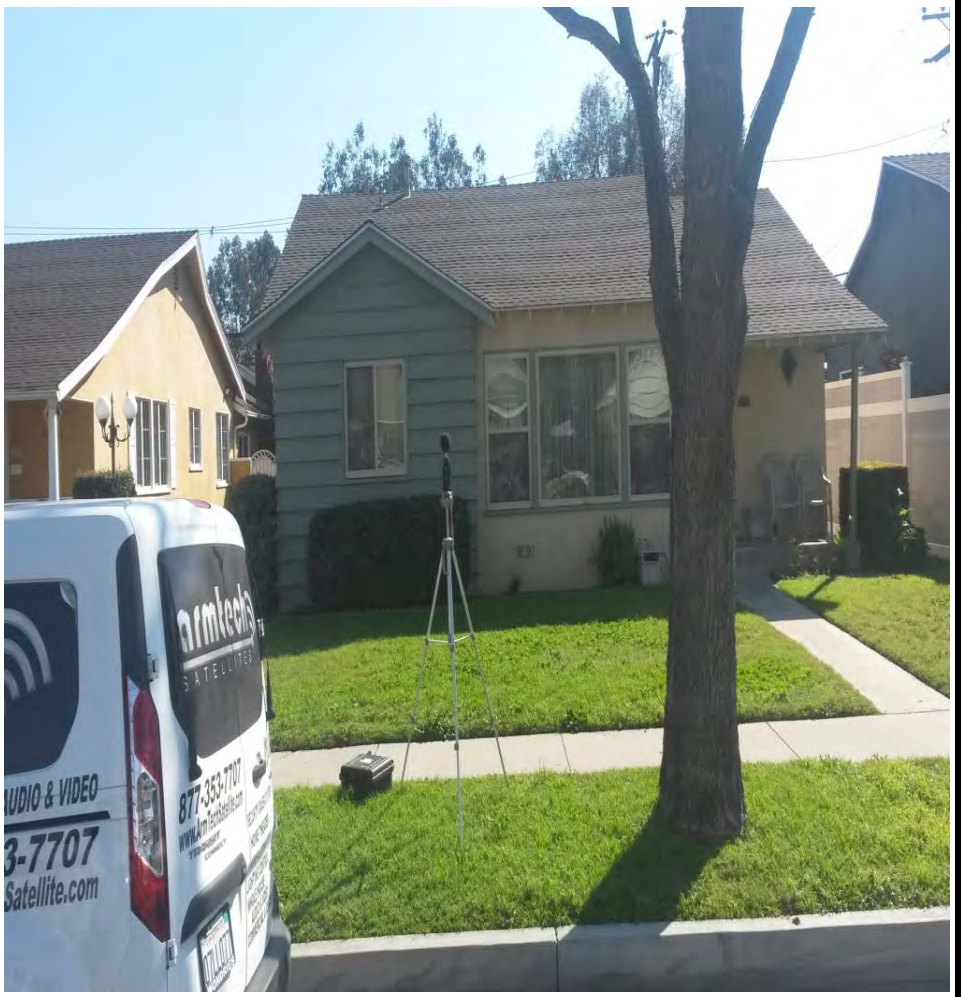

NM2 looking South towards residence

Summary						
File Name	LxT_Data.153					
Serial Number	0003099					
Model	SoundTrack LxT®					
Firmware Version	2.301					
User	Ian Edward Gallagher					
Location	NM2 JN6903					
Job Description	10min noise measurement					
Start	2017-02-28 14:09:23					
Stop	2017-02-28 14:19:23					
Duration	0:10:00.0					
Run Time	0:10:00.0					
Pause	0:00:00.0					
Pre Calibration	2017-02-28 14:09:06					
Post Calibration	None					
Calibration Deviation	---					
Overall Settings						
RMS Weight	A Weighting					
Peak Weight	Z Weighting					
Detector	Slow					
Preamp	PRMLxT1L					
Microphone Correction	Off					
Integration Method	Linear					
OBA Range	Low					
OBA Bandwidth	1/1 and 1/3					
OBA Freq. Weighting	Z Weighting					
OBA Max Spectrum	Bin Max					
Overload	122.0 dB					
Results						
LAeq	46.4 dB					
LAE	74.2 dB					
EA	2.913 µPa²h					
EA8	139.822 µPa²h					
EA40	699.109 µPa²h					
LZpeak (max)	2017-02-28 14:09:38		98.8 dB	**Statistics**		
LASmax	2017-02-28 14:11:59		56.7 dB	**LAS2.00**	51.8 dB	
LASmin	2017-02-28 14:16:58		40.9 dB	**LAS8.00**	49.4 dB	
SEA	-99.9 dB			**LAS25.00**	46.7 dB	
				LAS50.00	45.2 dB	
LCeq	59.7 dB			**LAS66.60**	44.5 dB	
LAeq	46.4 dB			**LAS90.00**	43.0 dB	
LCeq - LAeq	13.3 dB					
LAIeq	49.6 dB					
LAeq	46.4 dB					
LAIeq - LAeq	3.2 dB					
# Overloads	0					

APPENDIX D

RCNM Noise Modeling Output

Roadway Construction Noise Model (RCNM),Version 1.1

Report date: 3/1/2017
Case Description: 6903 Automated Car Wash and Auto Repair Center

---- Receptor #1 ----

		Baselines (dBA)		
Description	Land Use	Daytime	Evening	Night
Residential	Residential	65	65	45

Description	Impact Device	Equipment Usage(%)	Spec Lmax (dBA)	Actual Lmax (dBA)	Receptor Distance (feet)	Estimated Shielding (dBA)
Grader	No	40	85		25	0
Dozer	No	40		81.7	75	0
Dump Truck	No	40		76.5	125	0
Excavator	No	40		80.7	175	0
Backhoe	No	40		77.6	200	0

		Calculated (dBA)		Results Day
Equipment		*Lmax	Leq	Lmax
Grader		91	87	N/A
Dozer		78.1	74.2	N/A
Dump Truck		68.5	64.5	N/A
Excavator		69.8	65.8	N/A
Backhoe		65.5	61.5	N/A
	Total	91	87.3	N/A

*Calculated Lmax is the Loudest value.

APPENDIX E

Project Generated Trips FHWA Worksheets

FHWA Sound32 Spreadsheet

Existing Traffic Noise

Project: **6903 Automated Carwash and Auto Repair Center**

Road: **Los Coyotes Diagonal**

Segment: **North of Carson Street**

	DAYTIME			EVENING			NIGHTTIME			ADT	5160.00
	AUTOS	M.TRUCKS	H.TRUCKS	AUTOS	M.TRUCKS	H.TRUCKS	AUTOS	M.TRUCKS	H.TRUCKS	SPEED	35.00
										DISTANCE	50.00
INPUT PARAMETERS											
Vehicles per hour	298.85	6.19	10.32	221.88	1.03	1.72	55.04	8.60	14.33	% A	92
Speed in MPH	35.00	35.00	35.00	35.00	35.00	35.00	35.00	35.00	35.00		
Left angle	-90.00	-90.00	-90.00	-90.00	-90.00	-90.00	-90.00	-90.00	-90.00		
Right angle	90.00	90.00	90.00	90.00	90.00	90.00	90.00	90.00	90.00	% MT	3
NOISE CALCULATIONS											
Reference levels	65.11	74.83	80.05	65.11	74.83	80.05	65.11	74.83	80.05	% HT	5
ADJUSTMENTS											
Flow	19.01	2.17	4.39	17.71	-5.61	-3.39	11.66	3.60	5.82		
Distance	-0.07	-0.07	-0.07	-0.07	-0.07	-0.07	-0.07	-0.07	-0.07	LEFT	-90.00
Finite Roadway	0.00	0.00	0.00	0.00	0.00	0.00	0.00	0.00	0.00	RIGHT	90.00
Barrier	0.00	0.00	0.00	0.00	0.00	0.00	0.00	0.00	0.00		
Grade	0.00	0.00	0.00	0.00	0.00	0.00	0.00	0.00	0.00	CNEL	68.50
Constant	-25.00	-25.00	-25.00	-25.00	-25.00	-25.00	-25.00	-25.00	-25.00	DAY LEQ	62.61
LEQ	59.05	51.93	59.37	57.75	44.15	51.58	51.70	53.36	60.79	Day hour	89.00
										Absorbtive?	no
	DAY LEQ	62.61		EVENING LEQ	58.84		NIGHT LEQ	61.94		Use hour?	no
										GRADE dB	0.00
		CNEL	**68.50**								

FHWA Sound32 Spreadsheet

Existing Plus Project Traffic Noise

Project: **6903 Automated Carwash and Auto Repair Center**
Road: **Los Coyotes Diagonal**
Segment: **North of Carson Street**

	DAYTIME			EVENING			NIGHTTIME			ADT	5249.98
	AUTOS	M.TRUCKS	H.TRUCKS	AUTOS	M.TRUCKS	H.TRUCKS	AUTOS	M.TRUCKS	H.TRUCKS	SPEED	35.00
										DISTANCE	50.00
INPUT PARAMETERS											
Vehicles per hour	304.37	6.26	10.35	225.98	1.04	1.72	56.06	8.69	14.37	% A	92.09
Speed in MPH	35.00	35.00	35.00	35.00	35.00	35.00	35.00	35.00	35.00		
Left angle	-90.00	-90.00	-90.00	-90.00	-90.00	-90.00	-90.00	-90.00	-90.00		
Right angle	90.00	90.00	90.00	90.00	90.00	90.00	90.00	90.00	90.00	% MT	2.98
NOISE CALCULATIONS											
Reference levels	65.11	74.83	80.05	65.11	74.83	80.05	65.11	74.83	80.05	% HT	4.93
ADJUSTMENTS											
Flow	19.09	2.22	4.40	17.79	-5.56	-3.38	11.74	3.64	5.83		
Distance	-0.07	-0.07	-0.07	-0.07	-0.07	-0.07	-0.07	-0.07	-0.07	LEFT	-90.00
Finite Roadway	0.00	0.00	0.00	0.00	0.00	0.00	0.00	0.00	0.00	RIGHT	90.00
Barrier	0.00	0.00	0.00	0.00	0.00	0.00	0.00	0.00	0.00		
Grade	0.00	0.00	0.00	0.00	0.00	0.00	0.00	0.00	0.00	CNEL	68.53
Constant	-25.00	-25.00	-25.00	-25.00	-25.00	-25.00	-25.00	-25.00	-25.00	DAY LEQ	62.65
LEQ	59.13	51.98	59.38	57.83	44.19	51.60	51.78	53.40	60.80	Day hour	89.00
										Absorbtive?	no
	DAY LEQ	62.65		EVENING LEQ	58.91		NIGHT LEQ	61.97		Use hour?	no
										GRADE dB	0.00
		CNEL	**68.53**								

FHWA Sound32 Spreadsheet

Existing Traffic Noise

Project: **6903 Automated Carwash and Auto Repair Center**

Road: **Los Coyotes Diagonal**

Segment: **South of Carson Street**

	DAYTIME			EVENING			NIGHTTIME			ADT	17490.00
	AUTOS	M.TRUCKS	H.TRUCKS	AUTOS	M.TRUCKS	H.TRUCKS	AUTOS	M.TRUCKS	H.TRUCKS	SPEED	40.00
										DISTANCE	50.00
INPUT PARAMETERS											
Vehicles per hour	1012.96	20.99	34.98	752.07	3.50	5.83	186.56	29.15	48.58	% A	92
Speed in MPH	40.00	40.00	40.00	40.00	40.00	40.00	40.00	40.00	40.00		
Left angle	-90.00	-90.00	-90.00	-90.00	-90.00	-90.00	-90.00	-90.00	-90.00		
Right angle	90.00	90.00	90.00	90.00	90.00	90.00	90.00	90.00	90.00	% MT	3
NOISE CALCULATIONS											
Reference levels	67.36	76.31	81.16	67.36	76.31	81.16	67.36	76.31	81.16	% HT	5
ADJUSTMENTS											
Flow	23.73	6.89	9.11	22.44	-0.89	1.33	16.38	8.32	10.54		
Distance	-0.07	-0.07	-0.07	-0.07	-0.07	-0.07	-0.07	-0.07	-0.07	LEFT	-90.00
Finite Roadway	0.00	0.00	0.00	0.00	0.00	0.00	0.00	0.00	0.00	RIGHT	90.00
Barrier	0.00	0.00	0.00	0.00	0.00	0.00	0.00	0.00	0.00		
Grade	0.00	0.00	0.00	0.00	0.00	0.00	0.00	0.00	0.00	CNEL	74.60
Constant	-25.00	-25.00	-25.00	-25.00	-25.00	-25.00	-25.00	-25.00	-25.00	DAY LEQ	69.01
LEQ	66.02	58.14	65.20	64.73	50.35	57.42	58.67	59.56	66.63	Day hour	89.00
										Absorbtive?	no
	DAY LEQ	69.01		EVENING LEQ	65.60		NIGHT LEQ	67.95		Use hour?	no
										GRADE dB	0.00
		CNEL	**74.60**								

FHWA Sound32 Spreadsheet

Existing Plus Project Traffic Noise

Project: **6903 Automated Carwash and Auto Repair Center**
Road: **Los Coyotes Diagonal**
Segment: **South of Carson Street**

	DAYTIME			EVENING			NIGHTTIME			ADT	17579.98
	AUTOS	M.TRUCKS	H.TRUCKS	AUTOS	M.TRUCKS	H.TRUCKS	AUTOS	M.TRUCKS	H.TRUCKS	SPEED	40.00
										DISTANCE	50.00
INPUT PARAMETERS											
Vehicles per hour	1018.48	21.05	35.01	756.17	3.51	5.83	187.58	29.24	48.62	% A	92.03
Speed in MPH	40.00	40.00	40.00	40.00	40.00	40.00	40.00	40.00	40.00		
Left angle	-90.00	-90.00	-90.00	-90.00	-90.00	-90.00	-90.00	-90.00	-90.00		
Right angle	90.00	90.00	90.00	90.00	90.00	90.00	90.00	90.00	90.00	% MT	2.99
NOISE CALCULATIONS											
Reference levels	67.36	76.31	81.16	67.36	76.31	81.16	67.36	76.31	81.16	% HT	4.98
ADJUSTMENTS											
Flow	23.75	6.91	9.12	22.46	-0.87	1.33	16.41	8.33	10.54		
Distance	-0.07	-0.07	-0.07	-0.07	-0.07	-0.07	-0.07	-0.07	-0.07	LEFT	-90.00
Finite Roadway	0.00	0.00	0.00	0.00	0.00	0.00	0.00	0.00	0.00	RIGHT	90.00
Barrier	0.00	0.00	0.00	0.00	0.00	0.00	0.00	0.00	0.00		
Grade	0.00	0.00	0.00	0.00	0.00	0.00	0.00	0.00	0.00	CNEL	74.61
Constant	-25.00	-25.00	-25.00	-25.00	-25.00	-25.00	-25.00	-25.00	-25.00	DAY LEQ	69.02
LEQ	66.04	58.15	65.20	64.75	50.37	57.42	58.70	59.58	66.63	Day hour	89.00
										Absorbtive?	no
	DAY LEQ	69.02		EVENING LEQ	65.62		NIGHT LEQ	67.96		Use hour?	no
										GRADE dB	0.00
		CNEL	**74.61**								

FHWA Sound32 Spreadsheet

Existing Traffic Noise

Project: **6903 Automated Carwash and Auto Repair Center**

Road: **Carson Street**

Segment: **East of Los Coyotes Diagonal**

	DAYTIME			EVENING			NIGHTTIME			ADT	27930.00
	AUTOS	M.TRUCKS	H.TRUCKS	AUTOS	M.TRUCKS	H.TRUCKS	AUTOS	M.TRUCKS	H.TRUCKS	SPEED	40.00
										DISTANCE	50.00
INPUT PARAMETERS											
Vehicles per hour	1617.61	33.52	55.86	1200.99	5.59	9.31	297.92	46.55	77.58	% A	92
Speed in MPH	40.00	40.00	40.00	40.00	40.00	40.00	40.00	40.00	40.00		
Left angle	-90.00	-90.00	-90.00	-90.00	-90.00	-90.00	-90.00	-90.00	-90.00		
Right angle	90.00	90.00	90.00	90.00	90.00	90.00	90.00	90.00	90.00	% MT	3
NOISE CALCULATIONS											
Reference levels	67.36	76.31	81.16	67.36	76.31	81.16	67.36	76.31	81.16	% HT	5
ADJUSTMENTS											
Flow	25.76	8.93	11.14	24.47	1.14	3.36	18.41	10.35	12.57		
Distance	-0.07	-0.07	-0.07	-0.07	-0.07	-0.07	-0.07	-0.07	-0.07	LEFT	-90.00
Finite Roadway	0.00	0.00	0.00	0.00	0.00	0.00	0.00	0.00	0.00	RIGHT	90.00
Barrier	0.00	0.00	0.00	0.00	0.00	0.00	0.00	0.00	0.00		
Grade	0.00	0.00	0.00	0.00	0.00	0.00	0.00	0.00	0.00	CNEL	76.63
Constant	-25.00	-25.00	-25.00	-25.00	-25.00	-25.00	-25.00	-25.00	-25.00	DAY LEQ	71.04
LEQ	68.05	60.17	67.23	66.76	52.39	59.45	60.70	61.60	68.66	Day hour	89.00
										Absorbtive?	no
	DAY LEQ	71.04		EVENING LEQ	67.63		NIGHT LEQ	69.99		Use hour?	no
										GRADE dB	0.00
		CNEL	**76.63**								

FHWA Sound32 Spreadsheet

Existing Plus Project Traffic Noise

Project: **6903 Automated Carwash and Auto Repair Center**
Road: **Carson Street**
Segment: **East of Los Coyotes Diagonal**

	DAYTIME			EVENING			NIGHTTIME			ADT	28039.98
	AUTOS	M.TRUCKS	H.TRUCKS	AUTOS	M.TRUCKS	H.TRUCKS	AUTOS	M.TRUCKS	H.TRUCKS	SPEED	40.00
										DISTANCE	50.00
INPUT PARAMETERS											
Vehicles per hour	1624.36	33.60	55.89	1206.00	5.60	9.32	299.16	46.66	77.63	% A	92.02
Speed in MPH	40.00	40.00	40.00	40.00	40.00	40.00	40.00	40.00	40.00		
Left angle	-90.00	-90.00	-90.00	-90.00	-90.00	-90.00	-90.00	-90.00	-90.00		
Right angle	90.00	90.00	90.00	90.00	90.00	90.00	90.00	90.00	90.00	% MT	3.00
NOISE CALCULATIONS											
Reference levels	67.36	76.31	81.16	67.36	76.31	81.16	67.36	76.31	81.16	% HT	4.98
ADJUSTMENTS											
Flow	25.78	8.94	11.15	24.49	1.16	3.37	18.43	10.36	12.57		
Distance	-0.07	-0.07	-0.07	-0.07	-0.07	-0.07	-0.07	-0.07	-0.07	LEFT	-90.00
Finite Roadway	0.00	0.00	0.00	0.00	0.00	0.00	0.00	0.00	0.00	RIGHT	90.00
Barrier	0.00	0.00	0.00	0.00	0.00	0.00	0.00	0.00	0.00		
Grade	0.00	0.00	0.00	0.00	0.00	0.00	0.00	0.00	0.00	CNEL	76.64
Constant	-25.00	-25.00	-25.00	-25.00	-25.00	-25.00	-25.00	-25.00	-25.00	DAY LEQ	71.05
LEQ	68.07	60.18	67.24	66.78	52.40	59.46	60.72	61.61	68.66	Day hour	89.00
										Absorbtive?	no
	DAY LEQ	71.05		EVENING LEQ	67.65		NIGHT LEQ	69.99		Use hour?	no
										GRADE dB	0.00
		CNEL	**76.64**								

FHWA Sound32 Spreadsheet

Existing Traffic Noise

Project: **6903 Automated Carwash and Auto Repair Center**

Road: **Carson Street**

Segment: **West of Los Coyotes Diagonal**

	DAYTIME			EVENING			NIGHTTIME			ADT	23300.00
	AUTOS	M.TRUCKS	H.TRUCKS	AUTOS	M.TRUCKS	H.TRUCKS	AUTOS	M.TRUCKS	H.TRUCKS	SPEED	40.00
										DISTANCE	50.00
INPUT PARAMETERS											
Vehicles per hour	1349.46	27.96	46.60	1001.90	4.66	7.77	248.53	38.83	64.72	% A	92
Speed in MPH	40.00	40.00	40.00	40.00	40.00	40.00	40.00	40.00	40.00		
Left angle	-90.00	-90.00	-90.00	-90.00	-90.00	-90.00	-90.00	-90.00	-90.00		
Right angle	90.00	90.00	90.00	90.00	90.00	90.00	90.00	90.00	90.00	% MT	3
NOISE CALCULATIONS											
Reference levels	67.36	76.31	81.16	67.36	76.31	81.16	67.36	76.31	81.16	% HT	5
ADJUSTMENTS											
Flow	24.98	8.14	10.36	23.68	0.36	2.58	17.63	9.57	11.78		
Distance	-0.07	-0.07	-0.07	-0.07	-0.07	-0.07	-0.07	-0.07	-0.07	LEFT	-90.00
Finite Roadway	0.00	0.00	0.00	0.00	0.00	0.00	0.00	0.00	0.00	RIGHT	90.00
Barrier	0.00	0.00	0.00	0.00	0.00	0.00	0.00	0.00	0.00		
Grade	0.00	0.00	0.00	0.00	0.00	0.00	0.00	0.00	0.00	CNEL	75.84
Constant	-25.00	-25.00	-25.00	-25.00	-25.00	-25.00	-25.00	-25.00	-25.00	DAY LEQ	70.26
LEQ	67.27	59.38	66.45	65.97	51.60	58.67	59.92	60.81	67.87	Day hour	89.00
										Absorbtive?	no
	DAY LEQ	70.26		EVENING LEQ	66.84		NIGHT LEQ	69.20		Use hour?	no
										GRADE dB	0.00
		CNEL	**75.84**								

FHWA Sound32 Spreadsheet

Existing Plus Project Traffic Noise

Project: **6903 Automated Carwash and Auto Repair Center**
Road: **Carson Street**
Segment: **West of Los Coyotes Diagonal**

	DAYTIME			EVENING			NIGHTTIME			ADT	23599.94
	AUTOS	M.TRUCKS	H.TRUCKS	AUTOS	M.TRUCKS	H.TRUCKS	AUTOS	M.TRUCKS	H.TRUCKS	SPEED	40.00
										DISTANCE	50.00
INPUT PARAMETERS											
Vehicles per hour	1367.85	28.18	46.69	1015.56	4.70	7.78	251.92	39.14	64.85	% A	92.07
Speed in MPH	40.00	40.00	40.00	40.00	40.00	40.00	40.00	40.00	40.00		
Left angle	-90.00	-90.00	-90.00	-90.00	-90.00	-90.00	-90.00	-90.00	-90.00		
Right angle	90.00	90.00	90.00	90.00	90.00	90.00	90.00	90.00	90.00	% MT	2.99
NOISE CALCULATIONS											
Reference levels	67.36	76.31	81.16	67.36	76.31	81.16	67.36	76.31	81.16	% HT	4.95
ADJUSTMENTS											
Flow	25.03	8.17	10.37	23.74	0.39	2.58	17.69	9.60	11.79		
Distance	-0.07	-0.07	-0.07	-0.07	-0.07	-0.07	-0.07	-0.07	-0.07	LEFT	-90.00
Finite Roadway	0.00	0.00	0.00	0.00	0.00	0.00	0.00	0.00	0.00	RIGHT	90.00
Barrier	0.00	0.00	0.00	0.00	0.00	0.00	0.00	0.00	0.00		
Grade	0.00	0.00	0.00	0.00	0.00	0.00	0.00	0.00	0.00	CNEL	75.86
Constant	-25.00	-25.00	-25.00	-25.00	-25.00	-25.00	-25.00	-25.00	-25.00	DAY LEQ	70.29
LEQ	67.32	59.42	66.46	66.03	51.63	58.67	59.98	60.84	67.88	Day hour	89.00
										Absorbtive?	no
	DAY LEQ	70.29		EVENING LEQ	66.89		NIGHT LEQ	69.22		Use hour?	no
										GRADE dB	0.00
		CNEL	**75.86**								

APPENDIX F

SoundPLAN Input and Output

Noise Emissions of Industry Sources

Source name	Reference	Level			Corrections		
		Day dB(A)	Evening dB(A)	Night dB(A)	Kwall dB(A)	CI dB(A)	CT dB(A)
Blower 1	Unit	85.0	-	-	-	-	-
Car Wash Entrance	Unit	93.0	-	-	-	-	-
Pnuematic Equipment 1	Unit	83.0	-	-	-	-	-
Pnuematic Equipment 2	Unit	83.0	-	-	-	-	-
Pnuematic Equipment 3	Unit	83.0	-	-	-	-	-
Pnuematic Equipment 4	Unit	83.0	-	-	-	-	-
Pnuematic Equipment 5	Unit	83.0	-	-	-	-	-
Blower 2	Unit	85.0	-	-	-	-	-
Blower 3	Unit	85.0	-	-	-	-	-
Blower 4	Unit	85.0	-	-	-	-	-
Blower 5	Unit	85.0	-	-	-	-	-
Blower 6	Unit	85.0	-	-	-	-	-
Blower 7	Unit	85.0	-	-	-	-	-
Vacuum 1	Unit	65.0	-	-	-	-	-
Vacuum 2	Unit	65.0	-	-	-	-	-
Vacuum 3	Unit	65.0	-	-	-	-	-
Vacuum 4	Unit	65.0	-	-	-	-	-
Vacuum 5	Unit	65.0	-	-	-	-	-
Vacuum 6	Unit	65.0	-	-	-	-	-
Vacuum 7	Unit	65.0	-	-	-	-	-
Vacuum 8	Unit	65.0	-	-	-	-	-
Vacuum 9	Unit	65.0	-	-	-	-	-
Vacuum 10	Unit	65.0	-	-	-	-	-
Vacuum 11	Unit	65.0	-	-	-	-	-
Vacuum 12	Unit	65.0	-	-	-	-	-
Vacuum 13	Unit	65.0	-	-	-	-	-
Vacuum 14	Unit	65.0	-	-	-	-	-

Noise Emissions of Parking Lot Traffic

Name	Parking lot type	Low noise trolleys	Size	Movements per hour			Road surface	Separated method	Level
				Day	Evening	Night			dB(A)
1	Fast food restaurants (Drive-In	-	27	40.000	40.000	36.000	Asphaltic lanes	no	84.5
2	Fast food restaurants (Drive-In	-	7	40.000	40.000	36.000	Asphaltic lanes	no	75.5

Contribution Levels of the Receivers

Source name	Lane	Level Day dB(A)
1 Fl		55.7
1		55.5
2		37.0
Blower 1		24.0
Blower 2		23.5
Blower 3		25.6
Blower 4		25.1
Blower 5		24.6
Blower 6		21.6
Blower 7		22.3
Car Wash Entrance		40.1
Pnuematic Equipment 1		17.7
Pnuematic Equipment 2		18.8
Pnuematic Equipment 3		20.1
Pnuematic Equipment 4		21.8
Pnuematic Equipment 5		24.1
Vacuum 1		16.6
Vacuum 2		17.1
Vacuum 3		17.5
Vacuum 4		18.0
Vacuum 5		16.1
Vacuum 6		16.7
Vacuum 7		14.1
Vacuum 8		14.6
Vacuum 9		15.1
Vacuum 10		15.6
Vacuum 11		16.2
Vacuum 12		16.7
Vacuum 13		17.4
Vacuum 14		18.1
2 Fl		52.4
1		52.2
2		32.5
Blower 1		18.4
Blower 2		18.3
Blower 3		19.5
Blower 4		19.5
Blower 5		19.3
Blower 6		15.5
Blower 7		15.9
Car Wash Entrance		32.4
Pnuematic Equipment 1		17.3
Pnuematic Equipment 2		18.6
Pnuematic Equipment 3		20.0
Pnuematic Equipment 4		21.6
Pnuematic Equipment 5		23.1
Vacuum 1		5.8
Vacuum 2		5.7
Vacuum 3		5.5
Vacuum 4		0.0
Vacuum 5		0.4
Vacuum 6		1.0
Vacuum 7		14.4
Vacuum 8		14.9
Vacuum 9		15.5
Vacuum 10		16.1
Vacuum 11		16.7
Vacuum 12		17.4
Vacuum 13		18.1
Vacuum 14		18.9
3 Fl		42.9
1		41.3
2		34.3

Contribution Levels of the Receivers

Source name	Lane	Level Day dB(A)
Blower 1		18.6
Blower 2		18.5
Blower 3		16.9
Blower 4		17.0
Blower 5		17.0
Blower 6		15.0
Blower 7		14.9
Car Wash Entrance		32.4
Pnuematic Equipment 1		20.6
Pnuematic Equipment 2		22.3
Pnuematic Equipment 3		23.7
Pnuematic Equipment 4		24.7
Pnuematic Equipment 5		25.5
Vacuum 1		1.6
Vacuum 2		-0.6
Vacuum 3		-0.1
Vacuum 4		0.5
Vacuum 5		1.0
Vacuum 6		1.7
Vacuum 7		-1.8
Vacuum 8		-1.4
Vacuum 9		-1.0
Vacuum 10		-0.5
Vacuum 11		0.0
Vacuum 12		0.5
Vacuum 13		1.0
Vacuum 14		1.6
4	Fl	42.5
1		40.2
2		35.6
Blower 1		16.4
Blower 2		16.2
Blower 3		17.3
Blower 4		17.3
Blower 5		17.3
Blower 6		16.0
Blower 7		16.2
Car Wash Entrance		33.1
Pnuematic Equipment 1		24.0
Pnuematic Equipment 2		25.6
Pnuematic Equipment 3		24.3
Pnuematic Equipment 4		23.1
Pnuematic Equipment 5		21.7
Vacuum 1		-0.9
Vacuum 2		-0.4
Vacuum 3		0.1
Vacuum 4		0.7
Vacuum 5		1.2
Vacuum 6		1.8
Vacuum 7		-2.1
Vacuum 8		-1.7
Vacuum 9		-1.4
Vacuum 10		-1.0
Vacuum 11		-0.5
Vacuum 12		-0.3
Vacuum 13		0.1
Vacuum 14		0.6
5	Fl	51.4
1		43.3
2		37.9
Blower 1		19.4
Blower 2		18.9
Blower 3		21.8

Contribution Levels of the Receivers

Source name	Lane	Level Day dB(A)
Blower 4		21.7
Blower 5		21.7
Blower 6		19.4
Blower 7		19.8
Car Wash Entrance		50.4
Pnuematic Equipment 1		24.0
Pnuematic Equipment 2		22.6
Pnuematic Equipment 3		21.2
Pnuematic Equipment 4		19.7
Pnuematic Equipment 5		18.4
Vacuum 1		9.6
Vacuum 2		9.2
Vacuum 3		1.3
Vacuum 4		1.1
Vacuum 5		1.2
Vacuum 6		1.2
Vacuum 7		-2.7
Vacuum 8		-2.4
Vacuum 9		-2.0
Vacuum 10		-1.7
Vacuum 11		-1.3
Vacuum 12		-0.9
Vacuum 13		-0.6
Vacuum 14		-0.2
6 Fl		53.7
1		49.6
2		43.9
Blower 1		20.0
Blower 2		19.2
Blower 3		23.0
Blower 4		22.9
Blower 5		22.8
Blower 6		22.7
Blower 7		23.0
Car Wash Entrance		50.7
Pnuematic Equipment 1		25.9
Pnuematic Equipment 2		23.3
Pnuematic Equipment 3		21.2
Pnuematic Equipment 4		19.5
Pnuematic Equipment 5		18.1
Vacuum 1		4.4
Vacuum 2		6.3
Vacuum 3		16.7
Vacuum 4		17.3
Vacuum 5		18.0
Vacuum 6		18.8
Vacuum 7		13.7
Vacuum 8		14.1
Vacuum 9		14.5
Vacuum 10		15.0
Vacuum 11		15.4
Vacuum 12		4.0
Vacuum 13		3.7
Vacuum 14		3.0
7 Fl		59.7
1		54.2
2		53.4
Blower 1		22.9
Blower 2		22.0
Blower 3		25.7
Blower 4		25.6
Blower 5		25.4
Blower 6		25.4

Contribution Levels of the Receivers

Source name	Lane	Level Day dB(A)
Blower 7		25.7
Car Wash Entrance		55.1
Pnuematic Equipment 1		47.6
Pnuematic Equipment 2		44.8
Pnuematic Equipment 3		42.7
Pnuematic Equipment 4		40.9
Pnuematic Equipment 5		39.5
Vacuum 1		3.6
Vacuum 2		4.8
Vacuum 3		6.5
Vacuum 4		8.8
Vacuum 5		21.2
Vacuum 6		22.0
Vacuum 7		15.4
Vacuum 8		15.9
Vacuum 9		16.3
Vacuum 10		16.8
Vacuum 11		17.2
Vacuum 12		17.7
Vacuum 13		18.1
Vacuum 14		18.5
8	Fl	59.4
1		54.0
2		50.7
Blower 1		30.6
Blower 2		27.7
Blower 3		31.6
Blower 4		32.0
Blower 5		32.2
Blower 6		29.9
Blower 7		30.2
Car Wash Entrance		56.5
Pnuematic Equipment 1		41.5
Pnuematic Equipment 2		40.5
Pnuematic Equipment 3		39.4
Pnuematic Equipment 4		38.4
Pnuematic Equipment 5		37.4
Vacuum 1		4.8
Vacuum 2		5.3
Vacuum 3		5.8
Vacuum 4		6.3
Vacuum 5		15.7
Vacuum 6		24.3
Vacuum 7		12.2
Vacuum 8		12.5
Vacuum 9		12.9
Vacuum 10		13.2
Vacuum 11		13.6
Vacuum 12		16.1
Vacuum 13		20.2
Vacuum 14		20.4
9	Fl	53.2
1		48.6
2		46.6
Blower 1		38.9
Blower 2		37.2
Blower 3		38.1
Blower 4		38.2
Blower 5		38.2
Blower 6		37.0
Blower 7		37.2
Car Wash Entrance		43.9
Pnuematic Equipment 1		37.3

Contribution Levels of the Receivers

Source name	Lane	Level Day dB(A)
Pnuematic Equipment 2		37.0
Pnuematic Equipment 3		36.5
Pnuematic Equipment 4		36.0
Pnuematic Equipment 5		35.4
Vacuum 1		12.5
Vacuum 2		13.0
Vacuum 3		13.3
Vacuum 4		13.7
Vacuum 5		13.9
Vacuum 6		14.3
Vacuum 7		11.5
Vacuum 8		11.7
Vacuum 9		11.8
Vacuum 10		12.1
Vacuum 11		12.4
Vacuum 12		12.7
Vacuum 13		13.0
Vacuum 14		13.2
10 Fl		58.8
1		51.8
2		40.1
Blower 1		46.3
Blower 2		42.2
Blower 3		49.4
Blower 4		50.1
Blower 5		50.6
Blower 6		50.3
Blower 7		50.4
Car Wash Entrance		34.7
Pnuematic Equipment 1		34.3
Pnuematic Equipment 2		34.2
Pnuematic Equipment 3		24.8
Pnuematic Equipment 4		21.6
Pnuematic Equipment 5		20.6
Vacuum 1		23.8
Vacuum 2		11.9
Vacuum 3		12.0
Vacuum 4		12.1
Vacuum 5		12.2
Vacuum 6		12.5
Vacuum 7		19.7
Vacuum 8		19.8
Vacuum 9		19.7
Vacuum 10		19.3
Vacuum 11		9.8
Vacuum 12		7.4
Vacuum 13		7.0
Vacuum 14		6.6
11 Fl		80.1
1		58.6
2		36.2
Blower 1		72.7
Blower 2		72.2
Blower 3		70.8
Blower 4		70.9
Blower 5		70.8
Blower 6		71.4
Blower 7		71.9
Car Wash Entrance		34.6
Pnuematic Equipment 1		20.3
Pnuematic Equipment 2		21.1
Pnuematic Equipment 3		21.3
Pnuematic Equipment 4		22.0

Contribution Levels of the Receivers

Source name	Lane	Level Day dB(A)
Pnuematic Equipment 5		24.2
Vacuum 1		30.5
Vacuum 2		23.6
Vacuum 3		19.6
Vacuum 4		16.7
Vacuum 5		14.3
Vacuum 6		12.5
Vacuum 7		23.5
Vacuum 8		23.8
Vacuum 9		23.9
Vacuum 10		18.7
Vacuum 11		16.5
Vacuum 12		14.7
Vacuum 13		13.3
Vacuum 14		12.3
12	Fl	89.1
1		60.4
2		58.7
Blower 1		26.7
Blower 2		26.6
Blower 3		27.6
Blower 4		27.6
Blower 5		27.6
Blower 6		26.6
Blower 7		26.6
Car Wash Entrance		89.1
Pnuematic Equipment 1		45.4
Pnuematic Equipment 2		45.3
Pnuematic Equipment 3		44.7
Pnuematic Equipment 4		43.8
Pnuematic Equipment 5		42.8
Vacuum 1		14.7
Vacuum 2		15.8
Vacuum 3		17.6
Vacuum 4		20.5
Vacuum 5		24.9
Vacuum 6		35.5
Vacuum 7		13.0
Vacuum 8		13.7
Vacuum 9		14.4
Vacuum 10		15.3
Vacuum 11		16.5
Vacuum 12		17.9
Vacuum 13		19.7
Vacuum 14		24.4

Spectra of the Receivers

No.	Name	Floor	Time slice	63 Hz	125 Hz	250 Hz	500 Hz	1 kHz	2 kHz	4 kHz	8 kHz	16 kHz
10	10	Fl	Day	37.0	46.4	36.4	57.8	43.6	46.6	43.4	35.0	14.4
9	9	Fl	Day	37.5	46.1	35.3	50.0	41.9	43.6	42.0	33.5	11.0
7	7	Fl	Day	39.0	49.9	41.1	56.9	49.0	51.9	48.8	40.8	22.0
8	8	Fl	Day	39.3	49.5	40.5	57.3	47.3	50.0	47.8	39.7	20.1
12	12	Fl	Day	47.2	58.0	49.1	89.1	54.7	55.4	52.3	44.8	27.9
11	11	Fl	Day	44.9	54.9	45.3	80.1	50.1	50.5	47.3	40.0	23.5
6	6	Fl	Day	35.2	45.1	35.4	51.1	42.0	44.5	42.8	34.1	12.5
5	5	Fl	Day	33.9	42.1	29.4	50.5	34.1	34.2	30.7	20.7	-4.9
4	4	Fl	Day	32.8	40.1	26.4	36.1	25.4	25.7	22.1	25.2	3.4
3	3	Fl	Day	33.4	40.7	27.0	35.8	26.1	26.3	22.8	14.2	-5.9
1	1	Fl	Day	40.7	51.0	40.8	47.0	48.0	48.7	45.2	35.9	13.6
2	2	Fl	Day	37.2	47.0	37.2	43.2	45.2	45.8	42.3	33.6	13.3

Receiver List

No.	Receiver name	Building side	Floor	Limit Day dB(A)	Level Day dB(A)	Conflict Day dB(A)
1	1		Fl	-	55.7	-
2	2		Fl	-	52.4	-
3	3		Fl	-	42.9	-
4	4		Fl	-	42.5	-
5	5		Fl	-	51.4	-
6	6		Fl	-	53.7	-
7	7		Fl	-	59.7	-
8	8		Fl	-	59.4	-
9	9		Fl	-	53.2	-
10	10		Fl	-	58.8	-
11	11		Fl	-	80.1	-
12	12		Fl	-	89.1	-

APPENDIX “J”

Traffic Study

LAKEWOOD CAR WASH

TRAFFIC STUDY

JUNE 6, 2017

PREPARED FOR:

ALBERT A. WEBB ASSOCIATES
3788 McCray Street
Riverside, California 92506

PREPARED BY:

translutions, inc.
17632 Irvine Boulevard, Suite 200
Tustin, California 92780
(949) 656-3131

TABLE OF CONTENTS

1.0 INTRODUCTION 2
1.1 Purpose of the Traffic Study and Study Objectives 2
1.2 Project Location & Study Area 2
2.0 PROJECT DESCRIPTION 5
2.1 Project Trip Generation 5
2.2 Project Trip Distribution & Assignment 5
3.0 LOS DEFINITIONS, PROCEDURES, AND THRESHOLDS 5
3.1 Intersection Levels of Service 10
4.2 Cumulative (2018) Traffic Volumes 11
4.3 Existing and Cumulative (2018) With Project Traffic Volumes 11
5.0 EXISTING CONDITIONS 11
5.1 Existing Roadway Conditions 11
5.2 Existing Transit Service 11
5.3 Existing Pedestrian & Bicycle Facilities 11
5.4 Existing Intersections Levels of Service 11
5.5 Existing Plus Project Intersections Levels of Service 16
6.0 CUMULATIVE (2018) CONDITIONS 16
6.1 Cumulative (2018) Roadway Conditions 16
6.2 Cumulative (2018) Transit Service 16
6.3 Cumulative (2018) Pedestrian & Bicycle Facilities 16
6.4 Cumulative (2018) Intersections Levels of Service 16
6.5 Cumulative (2018) With Project Intersections Levels of Service 16
7.0 QUEUING ANALYSIS 16
8.0 IMPACT ANALYSIS FOR CEQA DETERMINATION 22
9.0 SUMMARY & CONCLUSIONS 22

APPENDICES

Appendix A: Traffic Counts
Appendix B: Detailed Volume Development Worksheets
Appendix C: Level of Service Worksheets

FIGURES AND TABLES

FIGURES

Figure 1: Regional Project Location 2
Figure 2: Site Plan 3
Figure 3: Study Area Intersections 4

Figure 4: Project Trip Distribution....8
Figure 5: Project Trip Assignment....9
Figure 6: Intersection Geometrics and Stop Control....13
Figure 7: Existing Peak Hour Traffic Volumes....14
Figure 8: Existing Plus Project Peak Hour Traffic Volumes....17
Figure 9: Cumulative (2018) Peak Hour Traffic Volumes....18
Figure 10: Cumulative (2018) With Project Peak Hour Traffic Volumes....20

TABLES

Table A: Project Trip Generation....6
Table B: Weekend Project Trip Generation....7
Table C: Intersection LOS Criteria....10
Table D: Cumulative Projects Trip Generation....12
Table E: Existing Intersection Levels of Service....15
Table F: Cumulative (2018) Intersection Levels of Service....19
Table G: Queuing Analysis....21

1.0 INTRODUCTION

This report presents the methodology, findings and conclusions of the traffic study prepared for the proposed Lakewood Car Wash project (the project). The proposed project will be located on 6741 Carson Street in the City of Lakewood (City). The proposed project will include a 3.1 thousand square-foot automated car wash and a 3.9 thousand square-foot car service.

1.1 Purpose of the Traffic Study and Study Objectives

This report is intended to satisfy the requirements for a traffic study established by the 2010 Los Angeles County Congestion Management Program (CMP), as well as the requirements for the disclosure of potential impacts and mitigation measures per the California Environmental Quality Act (CEQA). The CMP is implemented by the Los Angeles County Metropolitan Transportation Authority.

The CMP requires analysis of off-site intersections potentially affected by the project, which the CMP defines as intersections at which the project is forecast to add 50 or more peak hour trips. This report evaluates three intersections under four analysis scenarios, and proposes circulation improvements for intersections that operate or are forecast to operate at unsatisfactory levels of service. This report also includes a queuing analysis for the automated car wash to identify if the proposed storage length is adequate to meet the projected demand.

1.2 Project Location & Study Area

As stated earlier, the project is located at 6741 on Carson Street in the City of Lakewood. Figure 1 shows the regional location of the project. The project proposes the construction of a 3.1 thousand square-foot automated car wash and 3.9 thousand square-foot car service, and is planned to open in 2018. Figure 2 illustrates the site plan of the proposed project.

Based on the trip generation and trip distribution of the proposed project, and based on discussion with City staff, this report analyzes the following three intersections for traffic operations:

1. Driveway 1/Carson Street;
2. Driveway 2/Carson Street; and
3. Los Coyotes Diagonal/Carson Street.

Figure 3 illustrates intersections included in the traffic study.

1.3 Analysis Scenarios

Based on the CMP and discussion with City staff, this report analyzes traffic conditions for the following four scenarios:

1. Existing Conditions;
2. Existing Plus Project Conditions;
3. Cumulative (2018) Conditions; and
4. Cumulative (2018) With Project Conditions.

FIGURE 1

Legend

Project Boundary

Lakewood Car Wash
Regional Project Location

translutions
the transportation solutions company...

P:\Projects\Lakewood Carwash\Analysis\GIS\Reports\Regional Location.qgs (6/1/2017)

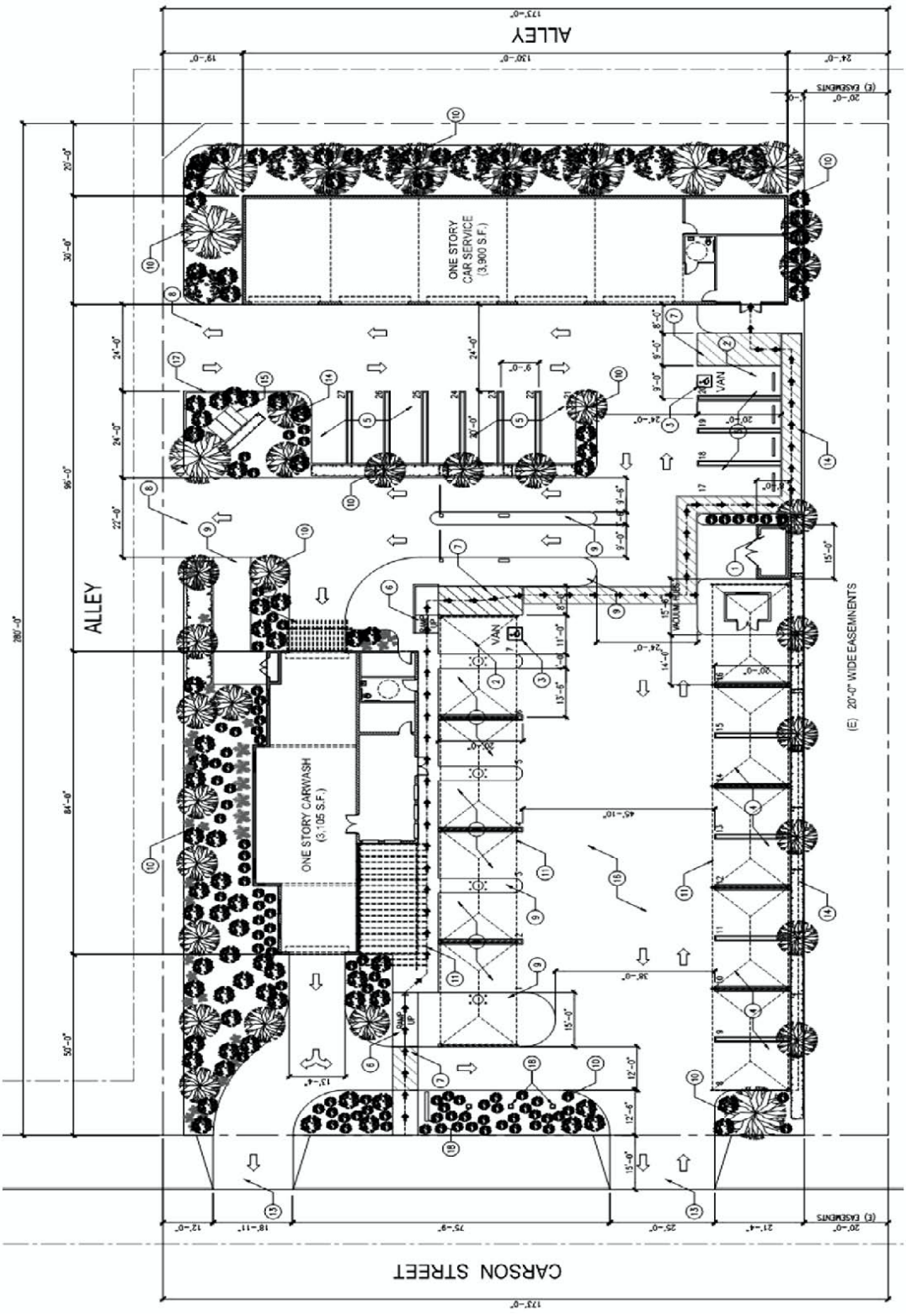

Source: Albert A. Webb Associates, 2017.

FIGURE 2

Lakewood Car Wash
Site Plan

translutions
the transportation solutions company...

Legend

Project Boundary

Study Area Intersections

Future Intersections

Existing Intersections

FIGURE 3

Lakewood Car Wash
Study Area Intersections

translutions
the transportation solutions company...

P:\Projects\Lakewood Carwash\Analysis\GIS\Reports\Site Plan.qgs (5/25/2017)

Consistent with the CMP, this report analyzes weekday a.m. and p.m. peak hour conditions. The a.m. peak hour is defined as the one hour of highest traffic volumes occurring between 7:00 a.m. and 9:00 a.m. The p.m. peak hour is defined as the one hour of highest traffic volumes occurring between 4:00 and 6:00 p.m.

2.0 PROJECT DESCRIPTION

The project site is currently occupied by an abandoned McDonald's restaurant that will be demolished and removed prior to the construction of the project. The lot consists of 1.05 acres and will include a total building area of 7,000 square-feet. Access to the project site will be provided via two driveways on Carson Street. The westerly driveway on Carson Street will be right-in/right-out only and the easterly driveway will be right-in/right-out/left-in access only. There is an existing alley adjacent to the project that includes minimal volume and was not included in this analysis.

2.1 Project Trip Generation

The trip generation for the proposed project is based on survey data from three existing facilities in Los Angeles and Orange County. These facilities were included because of similar characteristics such as similar site areas as the project, they include a car wash and car service buildings, and they are all located adjacent to major arterial roadways. The three facilities were surveyed on May 10, 2017 and included the following locations:

1. Unique Auto Spa Oil & Lube – 7624 Firestone Boulevard, Downey, CA 90241
2. Pacific Auto Spa – 11701 Whittier Boulevard, Whittier, CA 90601
3. Anaheim Hills Car Wash – 5810 La Palma Avenue, Anaheim CA 92807

Table A lists the trip generation for each of the surveyed sites. As shown in Table A, the maximum surveyed trip generation was for the Unique Auto Spa Oil & Lube site. The proposed project trip generation is based on this site, since it provides the most conservative analysis. Therefore, the proposed project is forecast to generate 12 total trips in the a.m. peak hour, 15 total trips in the p.m. peak hour, and 508 daily trips. At the request of City staff, the weekend trip generation for the project was developed based on Institute of Transportation Engineers (ITE) *Trip Generation 9th Edition* and included for informational purposes only. Table B lists the weekend trip generation.

2.2 Project Trip Distribution & Assignment

Trip distribution patterns for the proposed project were developed based on location of local and regional destinations and in consultation with City staff. Figure 4 shows the trip distribution for project trips. The project trip generation was applied to the trip distribution patterns for the proposed project to develop trip assignments project trips. Figure 5 shows the project trip assignment at the study intersections.

3.0 LOS DEFINITIONS, PROCEDURES, AND THRESHOLDS

Level of service (LOS) is a measure of the quality of operational conditions within a traffic stream, and is generally expressed in terms of such measures as speed and travel time, freedom to maneuver, traffic interruptions, and comfort and convenience. Levels range from A to F, with LOS A representing excellent (free-flow) conditions and LOS F representing extreme congestion. Consistent to the CMP, the Intersection Capacity Utilization (ICU) procedures have been used to evaluate levels of service for the signalized study area intersections and the Highway Capacity Manual (HCM) procedures have been used to analyze un-signalized study area intersections. This section discusses the LOS definitions, procedures, and thresholds used in this report.

translutions
the transportation solutions company...

Table A - Project Trip Generation

Land Use	AM Peak Hour			PM Peak Hour			Daily
	In	Out	Total	In	Out	Total	
Survey Sites							
Unique Auto Spa Oil & Lube [1]	6	6	12	8	7	15	508
Pacific Auto Spa [2]	6	4	10	1	0	1	98
Anaheim Hills Car Wash [3]	4	2	6	4	7	11	238
Average Trip Generation	5	4	9	4	5	9	281
Maximum Survey Trip Generation	6	6	12	8	7	15	508

[1] Unique Auto Spa Oil & Lube – 7624 Firestone Blvd, Downey, CA 90241

[2] Pacific Auto Spa – 11701 Whittier Blvd, Whittier, CA 90601

[3] Anaheim Hills Car Wash – 5810 La Palma Avenue, Anaheim, CA 92807

translutions
the tranportation solutions company...

Table B - Weekend Project Trip Generation

Land Use	Units	Saturday Peak Hour In	Saturday Peak Hour Out	Saturday Peak Hour Total	Sunday Peak Hour In	Sunday Peak Hour Out	Sunday Peak Hour Total
Automobile Care Center							
Trip Generation Rates[1]	Per TSF	11.86	11.86	23.72	5.94	5.94	11.88
Trip Generation	3.9 TSF	46	47	93	23	23	46
Automated Car Wash							
Trip Generation Rates[2]	Per TSF	7.06	7.06	14.12	7.06	7.06	14.12
Trip Generation	3.1 TSF	22	22	44	22	22	44
Total Trip Generation		68	69	137	45	45	90

Notes: TSF = Thousand Square Feet

[1] Trip generation based on rates for Land Use 942 - "Automobile Care Center" from Institute of Transportation Engineers' (ITE) *Trip Generation* (9th Edition).

[2] Trip generation based on rates for Land Use 948 - "Automated Car Wash" from Institute of Transportation Engineers' (ITE) *Trip Generation* (9th Edition). Since Sunday rates are not available, Saturday rates were applied to develop Sunday trip generation.

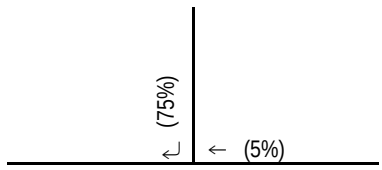

1 Dwy 1/Carson St

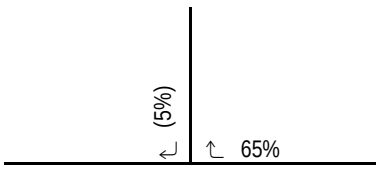

2 Dwy 2/Carson St

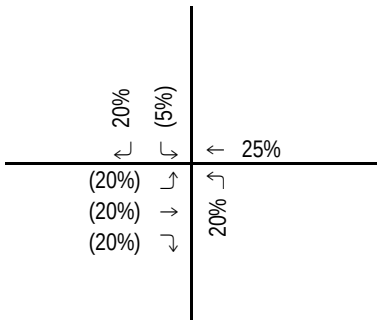

3 Los Coyotes Diagonal/Carson St

XX%(YY%) Outbound%(Inbound%) Volumes

FIGURE 4

Lakewood Car Wash
Project Trip Distribution

translutions
the transportation solutions company...

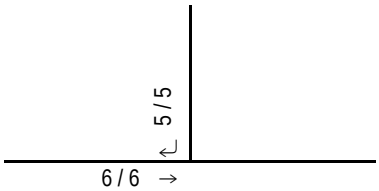

1 Dwy 1/Carson St

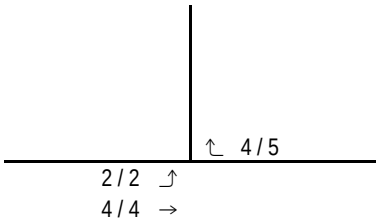

2 Dwy 2/Carson St

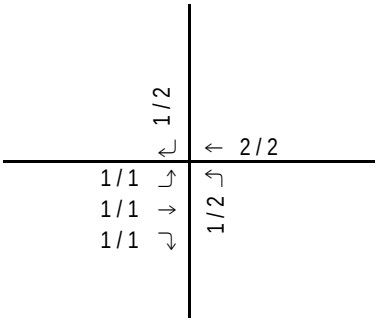

3 Los Coyotes Diagonal/Carson St

FIGURE 5

XXX / YYY AM / PM Project Trips

Lakewood Car Wash
Project Trip Assignment

translutions
the transportation solutions company...

3.1 Intersection Levels of Service

The analysis of traffic operations at signalized intersections was conducted according to the ICU methodologies. The ICU values represent volume/capacity (v/c) ratios for the peak hours, providing a measure of system performance. The analysis of traffic operations at all un-signalized intersections was conducted according to the Highway Capacity Manual 6th Edition (HCM) delay methodologies, which is described in the Highway Capacity Manual (Transportation Research Board, Washington, D.C., December 2016). Under the HCM methodology, LOS for un-signalized intersections is based on the worst approach where the minor leg has a shared lane and on the worst movement where the minor leg has dedicated turn lanes. Table C presents a brief description of each level of service letter grade, as well as the ICU and HCM range of delays associated with each grade.

Table C: Intersection LOS Criteria

LOS	Description of Drivers' Perception and Traffic Operation	ICU	HCM
A	This level is typically assigned when the volume-to-capacity ratio is low and either progression is exceptionally favorable or the cycle length is very short. If it is due to favorable progression, most vehicles arrive during the green indication and travel through the intersection without stopping.	0.00-0.60	≤ 10
B	This level is assigned when the volume-to-capacity ratio is low and either progression is highly favorable or the cycle length is short. More vehicles stop than with LOS A.	0.61-0.70	> 10 and ≤ 15
C	This level is typically assigned when progression is favorable or the cycle length is moderate. Individual cycle failures (i.e., one or more queued vehicles are not able to depart as a result of insufficient capacity during the cycle) may begin to appear at this level. The number of vehicles stopping is significant, although many vehicles still pass through the intersection without stopping.	0.71-0.80	> 15 and ≤ 25
D	This level is typically assigned when the volume-to-capacity ratio is high and either progression is ineffective or the cycle length is long. Many vehicles stop and individual cycle failures are noticeable.	0.81-0.90	> 25 and ≤ 35
E	This level is typically assigned when the volume-to-capacity ratio is high, progression is unfavorable, and the cycle length is long. Individual cycle failures are frequent.	0.91-1.00	> 35 and ≤ 50
F	This level is typically assigned when the volume-to-capacity ratio is very high, progression is very poor, and the cycle length is long. Most cycles fail to clear the queue.	>1.0	> 50

Source: *Highway Capacity Manual 2016/LA County CMP*

3.2 Levels of Service Thresholds

All study intersections are under the jurisdiction of the City of Lakewood or City of Long. Both cities consider intersections with an LOS D as the upper limit of satisfactory operations. Therefore, study intersections operating at LOS E or F are required to be mitigated to LOS D or better.

4.0 VOLUME DEVELOPMENT METHODOLOGY

Forecast traffic volumes at study intersections were developed based on discussion with City staff and consistent with CMP guidelines.

4.1 Existing Traffic Volumes

Existing traffic volumes are based on peak hour intersection turn movement counts collected by National Data and Surveying Services in May 2017. Count sheets are contained in Appendix A. Detailed volume development worksheets are included in Appendix B.

4.2 Cumulative (2018) Traffic Volumes

Based on discussion with City staff, cumulative (2018) peak hour traffic volumes were developed by applying a growth rate to the existing traffic volumes and adding cumulative project trips. The growth rate was derived from forecast growth factors from the SCAG model. Information for cumulative projects in the vicinity of the project was obtained from local jurisdictions including City of Lakewood, Hawaiian Gardens, County of Los Angeles, and City of Long Beach. Table D lists the cumulative projects included in the analysis. As shown in Table D, the cumulative projects are anticipated to generate 1,743 a.m. peak hour net new trips, 1,803 p.m. peak hour net trips, and 17,869 daily net new trips. Detailed volume development worksheets are included in Appendix B.

4.3 Existing and Cumulative (2018) With Project Traffic Volumes

Traffic volumes for existing and cumulative with project conditions were developed by adding the trip assignment to the corresponding (i.e. existing and cumulative) without project peak hour traffic volumes.

5.0 EXISTING CONDITIONS

This section discusses the existing transportation conditions in the study area.

5.1 Existing Roadway Conditions

Regional access to the project site is provided by Interstate 605 to the east. Local access to the project will be provided by the following roadways:

- Carson Street is oriented in the east-west direction and is classified as a 6-lane Major Highway. The posted speed limit is 40 miles per hour.
- Los Coyotes Diagonal is oriented in a north-south direction and is classified as a 4-lane Major Highway. The posted speed limit is 35 miles per hour.

5.2 Existing Transit Service

Public transportation services near the proposed project include bus transit service provided by Long Beach Transit. This service is further described below.

Public transportation is provided by Long Beach Transit, which is the transit operator adjacent to the proposed project. Route 101 provides service in the vicinity of the project site and travels along Carson Street with the closest stop on the northeast corner of Carson Street/Ostrom Avenue. Route 101 operates at 20-30 minute headways on weekdays. Route 173 provides service in the vicinity of the project site and travels along Los Coyotes Diagonal with the closest stop on the northeast corner of Los Coyotes Diagonal/Parkcrest Street. Route 173 operates at 30 minute headways on weekdays.

5.3 Existing Pedestrian & Bicycle Facilities

The existing bicycle facilities near the study area include Class I bicycle facilities on Carson Street and Los Coyotes Diagonal. The existing pedestrian network within the project area consists of sidewalks on the both sides of the street on Carson Street and Los Coyotes Diagonal.

5.4 Existing Intersections Levels of Service

An intersection level of service analysis was conducted for existing conditions to determine current circulation system performance. Figure 6 shows the lane geometrics and stop controls at the study intersections. The existing traffic volumes at study intersections are illustrated in Figure 7. Detailed volume development worksheets are included in Appendix B. The existing levels of service for the study area intersections are summarized in Table E. Level of

translutions
the transportation solutions company

Table D - Cumulative Projects Trip Generation

Project	Land Use	Units		A.M. Peak Hour In	A.M. Peak Hour Out	A.M. Peak Hour Total	P.M. Peak Hour In	P.M. Peak Hour Out	P.M. Peak Hour Total	Daily
1. 20727-20741 Elaine Ave, Lakewood CA	Residential Condominium/Townhouse[1]	21	DU	2	7	9	7	4	11	122
	Single-Family Detached Housing[2]	6	DU	(1)	(4)	(5)	(4)	(2)	(6)	(57)
	Net New Project Trips			1	3	4	3	2	5	65
2. 20721-20725 Elaine Ave, Lakewood CA	Single-Family Detached Housing[2]	6	DU	1	4	5	4	2	6	57
3. 11703 209th Street, Lakewood CA	Single-Family Detached Housing[2]	3	DU	1	1	2	2	1	3	29
	Single-Family Detached Housing[2]	1	DU	0	(1)	(1)	(1)	0	(1)	(10)
	Net New Project Trips			1	0	1	1	1	2	19
4. 11658 215th Street, Lakewood CA	Single-Family Detached Housing[2]	1	DU	0	1	1	1	0	1	10
5. 20937 Bloomfield Ave, Lakewood CA	Apartments[3]	22	DU	2	9	11	9	5	14	146
6. 20712-18 Seine Ave, Lakewood CA	Apartments[3]	16	DU	2	6	8	6	4	10	106
	Single-Family Detached Housing[2]	3	DU	(1)	(1)	(2)	(2)	(1)	(3)	(29)
	Net New Project Trips			1	5	6	4	3	7	77
7. 11624 Walcroft Street, Lakewood CA	Single-Family Detached Housing[2]	3	DU	1	1	2	2	1	3	29
	Single-Family Detached Housing[2]	1	DU	0	(1)	(1)	(1)	0	(1)	(10)
	Net New Project Trips			1	0	1	1	1	2	19
8. 11722 Walcroft Street, Lakewood CA	Single-Family Detached Housing[2]	2	DU	1	1	2	1	1	2	19
	Single-Family Detached Housing[2]	1	DU	0	(1)	(1)	(1)	0	(1)	(10)
	Net New Project Trips			1	0	1	0	1	1	9
9. 4134 Woodruff Avenue, Lakewood CA	Medical-Dental Office Building[4]	3	TSF	6	2	8	3	8	11	116
10. 6761 Carson Street, Lakewood CA	Bread/Donut/Bagel Shop without Drive-Through Window[5]	1	TSF	47	53	100	20	20	40	399
11. 11827 Centralia St, Lakewood CA	Automobile Care Center[6]	4	TSF	6	3	9	6	6	12	120
12. 12211 Centralia St, Lakewood CA	Supermarket[7]	2	TSF	4	2	6	9	8	17	184
	Pass-by Trips (PM: 36%)[8]			0	0	0	(3)	(3)	(6)	(6)
	Net New Project Trips			4	2	6	6	5	11	178
13. 4121 Los Coyotes Diagonal, Lakewood CA	Hair Salon[9]	2	TSF	2	0	2	1	2	3	29
14. 11871 Carson St (2nd floor only), Hawaiian Gardens CA	Casino/Video Lottery Establishment[10]	100	TSF	752	591	1343	752	591	1343	13,430
15. 21821 Hawaiian Ave, Hawaiian Gardens CA	Residential Condominium/Townhouse[1]	18	DU	1	7	8	6	3	9	105
16. 21530 Pioneer Blvd, Hawaiian Gardens CA	Hospital[11]	137	Beds	130	51	181	64	131	195	1,773
17. 1210 Carson St, Hawaiian Gardens CA	Health/Fitness Club[12]	40	TSF	28	28	56	80	61	141	1,317
Total Net New Trip Generation				984	759	1,743	961	842	1,803	17,869

[1] Trip generation based on rates for Land Use 230 "Residential Condominium/Townhouse" from Institute of Transportation Engineers (ITE) *Trip Generation, 9th Edition* .

[2] Trip generation based on rates for Land Use 210 "Single-Family Detached Housing" from ITE *Trip Generation, 9th Edition* .

[3] Trip generation based on rates for Land Use 220 "Apartment" from ITE *Trip Generation, 9th Edition* .

[4] Trip generation based on rates for Land Use 720 "Medical-Dental Office Building" from ITE *Trip Generation, 9th Edition* .

[5] Trip generation based on rates for Land Use 939 "Bread/Donut/Bagel Shop without Drive-Through Window" from ITE *Trip Generation, 9th Edition* .

[6] Trip generation based on rates for Land Use 942 "Automobile Care Center" from ITE *Trip Generation, 9th Edition* .

[7] Trip generation based on rates for Land Use 850 "Supermarket" from ITE *Trip Generation, 9th Edition* .

[8] Pass-by trips based on rates for Land Use 850 "Supermarket" from ITE *Trip Generation Manual, 2nd Edition* .

[9] Trip generation based on rates for Land Use 918 "Hair Salon" from ITE *Trip Generation, 9th Edition* .

[10] Trip generation based on rates for Land Use 888 "Casino/Video Lottery Establishment" from ITE *Trip Generation, 9th Edition* .

[11] Trip generation based on rates for Land Use 610 "Hospital" from ITE *Trip Generation, 9th Edition* .

[12] Trip generation based on rates for Land Use 492 "Health/Fitness Club" from ITE *Trip Generation, 9th Edition* .

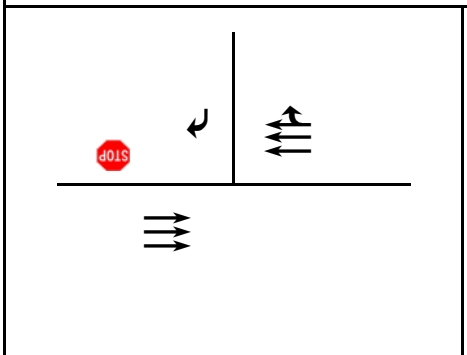

1 Project Driveway 1/Carson Street

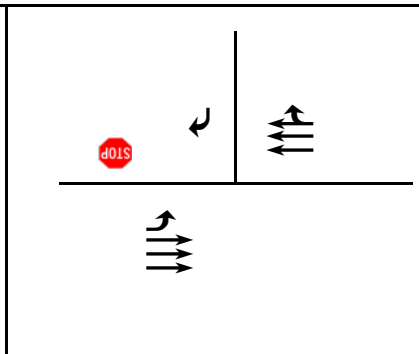

2 Project Driveway 2/Carson Street

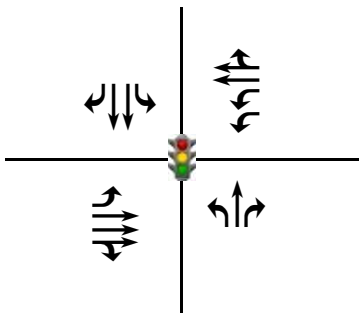

3 Los Coyotes Diagonal/Carson Street

FIGURE 6

Legend

Signal

Stop Sign

Lakewood Car Wash
Intersection Lane Geometrics and Stop Control

translutions
the transportation solutions company...

Future Intersection	Future Intersection	23 / 31 ↲ 207 / 123 ↓ 67 / 87 ↳ ↑ 41 / 108 ← 1078 / 957 ↰ 490 / 414 ↱ 8 / 33 ↱ 469 / 988 → 316 / 202 ↳ 252 / 303 ↰ 103 / 201 ↑ 352 / 535 ↱
1 Dwy 1/Carson St	2 Dwy 2/Carson St	3 Los Coyotes Diagonal/Carson St

FIGURE 7

XXXX / YYYY AM / PM Peak Hour Traffic Volumes

Lakewood Car Wash
Existing Peak Hour Traffic Volumes

translutions
the transportation solutions company...

D:\Projects\Lakewood Car Wash\Analysis\Z12 Existing 6/2/2017

translutions
the transportation solutions company...

Table E: Existing Intersection Levels of Service

Intersection	Control	Without Project						With Project						Direct Project Impact
		AM Peak Hour			PM Peak Hour			AM Peak Hour			PM Peak Hour			
		Delay	ICU	LOS	Delay	ICU	LOS	Delay	ICU	LOS	Delay	ICU	LOS	
1 . Project Driveway 1/Carson Street	TWSC	*Project Driveway*						16.70	-	C	16.10	-	C	No
2 . Project Driveway 2/Carson Street	TWSC	*Project Driveway*						20.50	-	C	19.40	-	C	No
3 . Los Coyotes Diagonal/Carson Street	Signal	-	0.68	B	-	0.76	C	-	0.68	B	-	0.76	C	No

Notes:

ICU = Intersection Capacity Utilization

TWSC = Two-Way Stop Control; For TWSC intersections, reported delay is for worst-case movement.

LOS = Level of Service

service calculation worksheets are contained in Appendix C. As shown in Table E, all study area intersections are currently operating at satisfactory levels of service.

5.5 Existing Plus Project Intersections Levels of Service

An intersection level of service analysis was conducted for existing plus project conditions to determine circulation system performance. Existing plus project traffic volumes at study intersections are shown in Figure 8. The existing plus project levels of service for the study area intersections are summarized in Table E. Level of service calculation worksheets are contained in Appendix C. As shown in Table E, all study area intersections are forecast to operate at satisfactory levels of service.

6.0 CUMULATIVE (2018) CONDITIONS

This section discusses cumulative (2018) transportation conditions in the study area. It is anticipated that the project will open in 2018.

6.1 Cumulative (2018) Roadway Conditions

Cumulative (2018) roadway conditions are assumed to be the same as those under existing conditions.

6.2 Cumulative (2018) Transit Service

Transit service under cumulative (2018) conditions are anticipated to remain the same as under existing conditions.

6.3 Cumulative (2018) Pedestrian & Bicycle Facilities

Pedestrian and bicycle facilities under cumulative (2018) conditions are anticipated to remain the same as under existing conditions.

6.4 Cumulative (2018) Intersections Levels of Service

An intersection level of service analysis was conducted for cumulative (2018) conditions to determine circulation system performance. Cumulative (2018) traffic volumes at study intersections are shown in Figure 9. Cumulative (2018) levels of service for the study area intersections are summarized in Table F. Detailed volume development worksheets are included in Appendix B. Level of service calculation worksheets are contained in Appendix C. As shown in Table F, all study area intersections are forecast to operate at satisfactory levels of service.

6.5 Cumulative (2018) With Project Intersections Levels of Service

An intersection level of service analysis was conducted for cumulative (2018) with project conditions to determine circulation system performance. Cumulative (2018) with project traffic volumes at study intersections are shown in Figure 10. The cumulative (2018) with project levels of service for the study area intersections are summarized in Table F. Level of service calculation worksheets are contained in Appendix C. As shown in Table F, all study area intersections are forecast to operate at satisfactory levels of service.

7.0 QUEUING ANALYSIS

A queuing analysis for the car wash facility has been included in this report to determine if vehicles queues would extend beyond the storage length provided by the car wash out into the adjacent roadway. Table G lists the queueing analysis for the car wash during the p.m. peak hour. The total inbound trips during the p.m. peak hour is 8 vehicles. The service rate for the car wash is 35 vehicles per hour and is based on data from *Queue Areas for Drive-thru Facilities* by ITE Technical Council Committee 5D-10 (1995). The queue length was determined using the arrival rate/service rate and distributed using the poisson distribution. The 95th percentile queue length is approximately

1 Dwy 1/Carson St	2 Dwy 2/Carson St	3 Los Coyotes Diagonal/Carson St
5 / 5 ↲		
← 1353 / 1291	↰ 4 / 5	24 / 33 ↲ 207 / 123 ↓ 67 / 87 ↳
	← 1353 / 1291	↰ 41 / 108
		← 1080 / 959
		↶ 490 / 414
799 / 1229 →	2 / 2 ↱	9 / 34 ↱
	797 / 1227 →	470 / 989 →
		317 / 203 ↴
		253 / 305 ↰ 103 / 201 ↑ 352 / 535 ↱

FIGURE 8

XXXX / YYYY AM / PM Peak Hour Traffic Volumes

Lakewood Car Wash
Existing Plus Project Peak Hour Traffic Volumes

translutions
the transportation solutions company...

Future Intersection	Future Intersection	32 / 36 209 / 124 68 / 89 ↰ 42 / 109 ← 1242 / 1134 ↲ 495 / 418 ↳ 32 / 42 ↱ 671 / 1191 → 330 / 208 ↴ 264 / 310 ↰ 104 / 203 ↑ 356 / 540 ↱
1 Dwy 1/Carson St	2 Dwy 2/Carson St	3 Los Coyotes Diagonal/Carson St

FIGURE 9

XXXX / YYYY AM / PM Peak Hour Traffic Volumes

Lakewood Car Wash
Cumulative (2018) Peak Hour Traffic Volumes

translutions
the transportation solutions company...

D:\Projects\Lakewood Car Wash\Analysis\Z12 OY 6/2/2017

translutions
the transportation solutions company...

Table F: Cumulative Intersection Levels of Service

Intersection	Control	Without Project						With Project						Direct Project Impact
		AM Peak Hour			PM Peak Hour			AM Peak Hour			PM Peak Hour			
		Delay	ICU	LOS	Delay	ICU	LOS	Delay	ICU	LOS	Delay	ICU	LOS	
1 . Project Driveway 1/Carson Street	TWSC	*Project Driveway*						18.80	-	C	18.00	-	C	No
2 . Project Driveway 2/Carson Street	TWSC	*Project Driveway*						25.00	-	C	23.30	-	C	No
3 . Los Coyotes Diagonal/Carson Street	Signal	-	0.76	C	-	0.80	C	-	0.76	C	-	0.81	D	No

Notes:

ICU = Intersection Capacity Utilization

TWSC = Two-Way Stop Control; For TWSC intersections, reported delay is for worst-case movement.

LOS = Level of Service

* Exceeds Level of Service

1 Dwy 1/Carson St

5 / 5 ↲ ← 1556 / 1485

1038 / 1447 →

2 Dwy 2/Carson St

↰ 4 / 5

← 1556 / 1485

2 / 2 ↱

1036 / 1445 →

3 Los Coyotes Diagonal/Carson St

33 / 38	209 / 124	68 / 89	
↲	↓	↳	↰ 42 / 109
			← 1244 / 1136
			↶ 495 / 418
33 / 43 ↱			↰
672 / 1192 →			↑
331 / 209 ↴			↱
265 / 312	104 / 203	356 / 540	

FIGURE 10

XXXX / YYYY AM / PM Peak Hour Traffic Volumes

Lakewood Car Wash

Cumulative (2018) With Project Peak Hour Traffic Volumes

translutions
the transportation solutions company...

translutions
the transportation solutions company...

Table G: Queuing Analysis For Car Wash (PM Peak Hour)

Trip Generation (Inbound)	8	during p.m. peak hour
Turn Made into Property	8	right turns
Service Rate	35.00	/hour
Arrival Rate	8.00	/hour
Arrival Percent	100.0%	
Capacity	35.00	/hour
p_total	0.2286	

Number of Vehicles in Queue	Probability of Vehicles	Probability of Queue Less or Equal to
0	77.1%	77.14%
1	17.6%	94.78%
2	4.0%	98.81%
3	0.9%	99.73%
4	0.2%	99.94%
5	0.0%	99.99%
6	0.0%	100.00%
7	0.0%	100.00%
8	0.0%	100.00%
9	0.0%	100.00%
10	0.0%	100.00%
11	0.0%	100.00%
12	0.0%	100.00%
13	0.0%	100.00%
14	0.0%	100.00%
15	0.0%	100.00%
16	0.0%	100.00%
17	0.0%	100.00%
18	0.0%	100.00%
19	0.0%	100.00%
20	0.0%	100.00%

between 1 to 2 vehicles during the p.m. peak hour. With an average vehicle length of 25 feet, the maximum queue length would be 50 feet. Based on the site plan, there is sufficient storage length to accommodate the maximum queue length without vehicles extending out into the adjacent roadway or the alley.

8.0 IMPACT ANALYSIS FOR CEQA DETERMINATION

This section evaluates the CEQA checklist for impact evaluation.

A. Will the project conflict with an applicable plan, ordinance or policy establishing measures of effectiveness for the performance of the circulation system?
Based on the results of the analysis, the project does not degrade traffic operations below those acceptable in the City's General Plan. Therefore, the project impact is considered less than significant.

B. Conflict with an applicable congestion management program, including, but not limited to level of service standards, significant thresholds, or other standards established by the county congestion management agency for designated roads or highways?
The project does not conflict with the County's CMP and does not propose changes to the City's LOS standards. All study intersections will operate at satisfactory conditions and do not exceed CMP significance thresholds. Therefore, the project impact is considered less than significant.

C. Result in a change in air traffic patterns, including either an increase in traffic levels or a change in location that results in substantial safety risks?
The project does not propose any use that would affect or conflict with air traffic patterns. Therefore, the project impact is considered less than-significant.

D. Substantially increase hazards due to a design feature (e.g., sharp curves or dangerous intersections) or incompatible uses (e.g., farm equipment)?
Design of driveways will be based on City Code, which sets the standard for such design. It is not anticipated that traffic hazards will increase. Therefore, the project impact is considered less than significant.

E. Result in inadequate emergency access?
The project will not result in inadequate emergency access. Therefore, the project impact is considered less than significant.

F. Conflict with adopted policies, plans, or programs regarding public transit, bicycle, or pedestrian facilities, or otherwise decrease the performance or safety of such facilities?
The project will not change roadway designations from those in the City's General Plan. The project will also not result in removal of any of the facilities listed above. Therefore, the project impact is considered less than significant.

9.0 SUMMARY & CONCLUSIONS

The proposed project is forecast to generate 12 new trips in the a.m. peak hour, 15 new trips in the p.m. peak hour, and 508 new daily trips. Based on this analysis, all intersections are projected to operate at satisfactory LOS under

all analysis scenarios. In addition, the queuing analysis for the car wash finds that there is sufficient storage length to accommodate the maximum queue length without vehicles extending out into the adjacent alley

APPENDIX A:
TRAFFIC COUNTS

Counts Unlimited
PO Box 1178
Corona, CA 92878
(951) 268-6268

City of Lakewood
N/S: Los Coyotes Diagonal
E/W: Carson Street
Weather: Clear

File Name : LKWLCCAAM
Site Code :
Start Date : 5/16/2017
Page No : 1

Groups Printed- Total Volume

	Los Coyotes Diagonal Southbound				Carson Street Westbound				Los Coyotes Diagonal Northbound				Carson Street Eastbound				
Start Time	Left	Thru	Right	App. Total	Left	Thru	Right	App. Total	Left	Thru	Right	App. Total	Left	Thru	Right	App. Total	Int. Total
07:00 AM	23	40	10	73	87	191	7	285	27	5	72	104	1	94	26	121	583
07:15 AM	16	58	2	76	118	281	6	405	51	14	88	153	1	127	38	166	800
07:30 AM	24	69	3	96	160	257	4	421	41	13	87	141	1	120	37	158	816
07:45 AM	8	50	7	65	152	300	7	459	63	35	83	181	0	123	54	177	882
Total	71	217	22	310	517	1029	24	1570	182	67	330	579	3	464	155	622	3081
08:00 AM	19	47	6	72	121	272	13	406	55	18	102	175	1	132	71	204	857
08:15 AM	21	48	5	74	117	264	8	389	63	18	84	165	5	101	83	189	817
08:30 AM	19	62	5	86	100	242	13	355	71	32	83	186	2	113	108	223	850
08:45 AM	14	32	6	52	78	220	13	311	74	29	107	210	2	147	44	193	766
Total	73	189	22	284	416	998	47	1461	263	97	376	736	10	493	306	809	3290
Grand Total	144	406	44	594	933	2027	71	3031	445	164	706	1315	13	957	461	1431	6371
Apprch %	24.2	68.4	7.4		30.8	66.9	2.3		33.8	12.5	53.7		0.9	66.9	32.2		
Total %	2.3	6.4	0.7	9.3	14.6	31.8	1.1	47.6	7	2.6	11.1	20.6	0.2	15	7.2	22.5	

	Los Coyotes Diagonal Southbound				Carson Street Westbound				Los Coyotes Diagonal Northbound				Carson Street Eastbound				
Start Time	Left	Thru	Right	App. Total	Left	Thru	Right	App. Total	Left	Thru	Right	App. Total	Left	Thru	Right	App. Total	Int. Total
Peak Hour Analysis From 07:00 AM to 08:45 AM - Peak 1 of 1																	
Peak Hour for Entire Intersection Begins at 07:45 AM																	
07:45 AM	8	50	**7**	65	**152**	**300**	7	**459**	63	**35**	83	181	0	123	54	177	**882**
08:00 AM	19	47	6	72	121	272	**13**	406	55	18	**102**	175	1	**132**	71	204	857
08:15 AM	**21**	48	5	74	117	264	8	389	63	18	84	165	**5**	101	83	189	817
08:30 AM	19	**62**	5	**86**	100	242	13	355	**71**	32	83	**186**	2	113	**108**	**223**	850
Total Volume	67	207	23	297	490	1078	41	1609	252	103	352	707	8	469	316	793	3406
% App. Total	22.6	69.7	7.7		30.5	67	2.5		35.6	14.6	49.8		1	59.1	39.8		
PHF	.798	.835	.821	.863	.806	.898	.788	.876	.887	.736	.863	.950	.400	.888	.731	.889	.965

Counts Unlimited
PO Box 1178
Corona, CA 92878
(951) 268-6268

City of Lakewood
N/S: Los Coyotes Diagonal
E/W: Carson Street
Weather: Clear

File Name : LKWLCCAAM
Site Code :
Start Date : 5/16/2017
Page No : 2

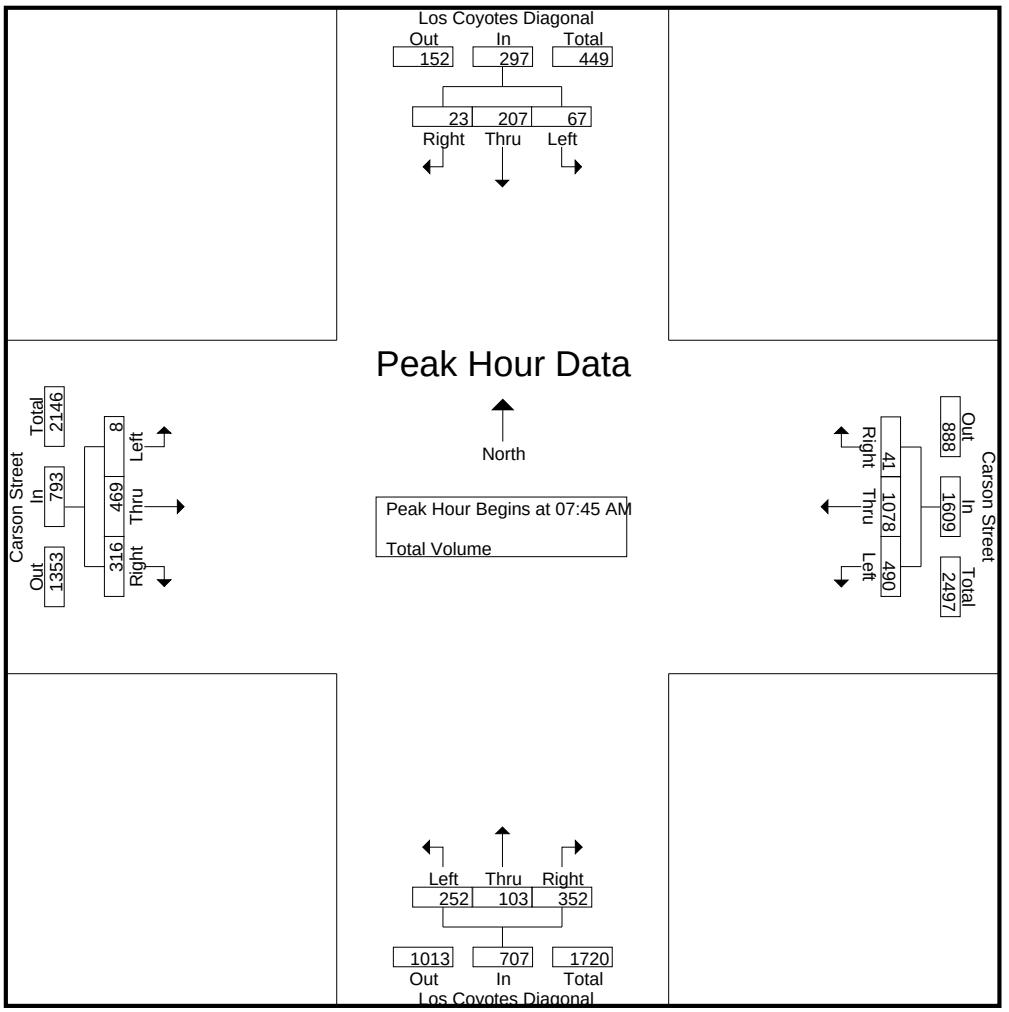

Peak Hour Analysis From 07:00 AM to 08:45 AM - Peak 1 of 1
Peak Hour for Each Approach Begins at:

	07:00 AM				07:15 AM				08:00 AM				08:00 AM			
+0 mins.	23	40	**10**	73	118	281	6	405	55	18	102	175	1	132	71	204
+15 mins.	16	58	2	76	**160**	257	4	421	63	18	84	165	**5**	101	83	189
+30 mins.	**24**	**69**	3	**96**	152	**300**	7	**459**	71	**32**	83	186	2	113	**108**	**223**
+45 mins.	8	50	7	65	121	272	**13**	406	**74**	29	**107**	**210**	2	**147**	44	193
Total Volume	71	217	22	310	551	1110	30	1691	263	97	376	736	10	493	306	809
% App. Total	22.9	70	7.1		32.6	65.6	1.8		35.7	13.2	51.1		1.2	60.9	37.8	
PHF	.740	.786	.550	.807	.861	.925	.577	.921	.889	.758	.879	.876	.500	.838	.708	.907

Counts Unlimited
PO Box 1178
Corona, CA 92878
(951) 268-6268

City of Lakewood
N/S: Los Coyotes Diagonal
E/W: Carson Street
Weather: Clear

File Name : LKWLCCAPM
Site Code :
Start Date : 5/16/2017
Page No : 1

Groups Printed- Total Volume

	Los Coyotes Diagonal Southbound				Carson Street Westbound				Los Coyotes Diagonal Northbound				Carson Street Eastbound				
Start Time	Left	Thru	Right	App. Total	Left	Thru	Right	App. Total	Left	Thru	Right	App. Total	Left	Thru	Right	App. Total	Int. Total
04:00 PM	26	33	13	72	97	231	28	356	90	60	141	291	8	268	43	319	1038
04:15 PM	22	39	4	65	96	229	19	344	54	43	101	198	6	227	57	290	897
04:30 PM	19	31	6	56	100	242	30	372	78	41	127	246	6	247	50	303	977
04:45 PM	20	30	12	62	115	244	28	387	73	57	116	246	9	253	58	320	1015
Total	87	133	35	255	408	946	105	1459	295	201	485	981	29	995	208	1232	3927
05:00 PM	24	31	7	62	90	243	26	359	77	42	150	269	10	215	47	272	962
05:15 PM	24	31	6	61	109	228	24	361	75	61	142	278	8	273	47	328	1028
05:30 PM	27	28	7	62	97	232	17	346	81	39	139	259	4	253	45	302	969
05:45 PM	23	41	4	68	87	236	22	345	58	38	127	223	6	278	43	327	963
Total	98	131	24	253	383	939	89	1411	291	180	558	1029	28	1019	182	1229	3922
Grand Total	185	264	59	508	791	1885	194	2870	586	381	1043	2010	57	2014	390	2461	7849
Apprch %	36.4	52	11.6		27.6	65.7	6.8		29.2	19	51.9		2.3	81.8	15.8		
Total %	2.4	3.4	0.8	6.5	10.1	24	2.5	36.6	7.5	4.9	13.3	25.6	0.7	25.7	5	31.4	

	Los Coyotes Diagonal Southbound				Carson Street Westbound				Los Coyotes Diagonal Northbound				Carson Street Eastbound				
Start Time	Left	Thru	Right	App. Total	Left	Thru	Right	App. Total	Left	Thru	Right	App. Total	Left	Thru	Right	App. Total	Int. Total
Peak Hour Analysis From 04:00 PM to 05:45 PM - Peak 1 of 1																	
Peak Hour for Entire Intersection Begins at 04:30 PM																	
04:30 PM	19	**31**	6	56	100	242	**30**	372	**78**	41	127	246	6	247	50	303	977
04:45 PM	20	30	**12**	**62**	**115**	**244**	28	**387**	73	57	116	246	9	253	**58**	320	1015
05:00 PM	**24**	31	7	62	90	243	26	359	77	42	**150**	269	**10**	215	47	272	962
05:15 PM	24	31	6	61	109	228	24	361	75	**61**	142	**278**	8	**273**	47	**328**	**1028**
Total Volume	87	123	31	241	414	957	108	1479	303	201	535	1039	33	988	202	1223	3982
% App. Total	36.1	51	12.9		28	64.7	7.3		29.2	19.3	51.5		2.7	80.8	16.5		
PHF	.906	.992	.646	.972	.900	.981	.900	.955	.971	.824	.892	.934	.825	.905	.871	.932	.968

Counts Unlimited
PO Box 1178
Corona, CA 92878
(951) 268-6268

City of Lakewood
N/S: Los Coyotes Diagonal
E/W: Carson Street
Weather: Clear

File Name : LKWLCCAPM
Site Code :
Start Date : 5/16/2017
Page No : 2

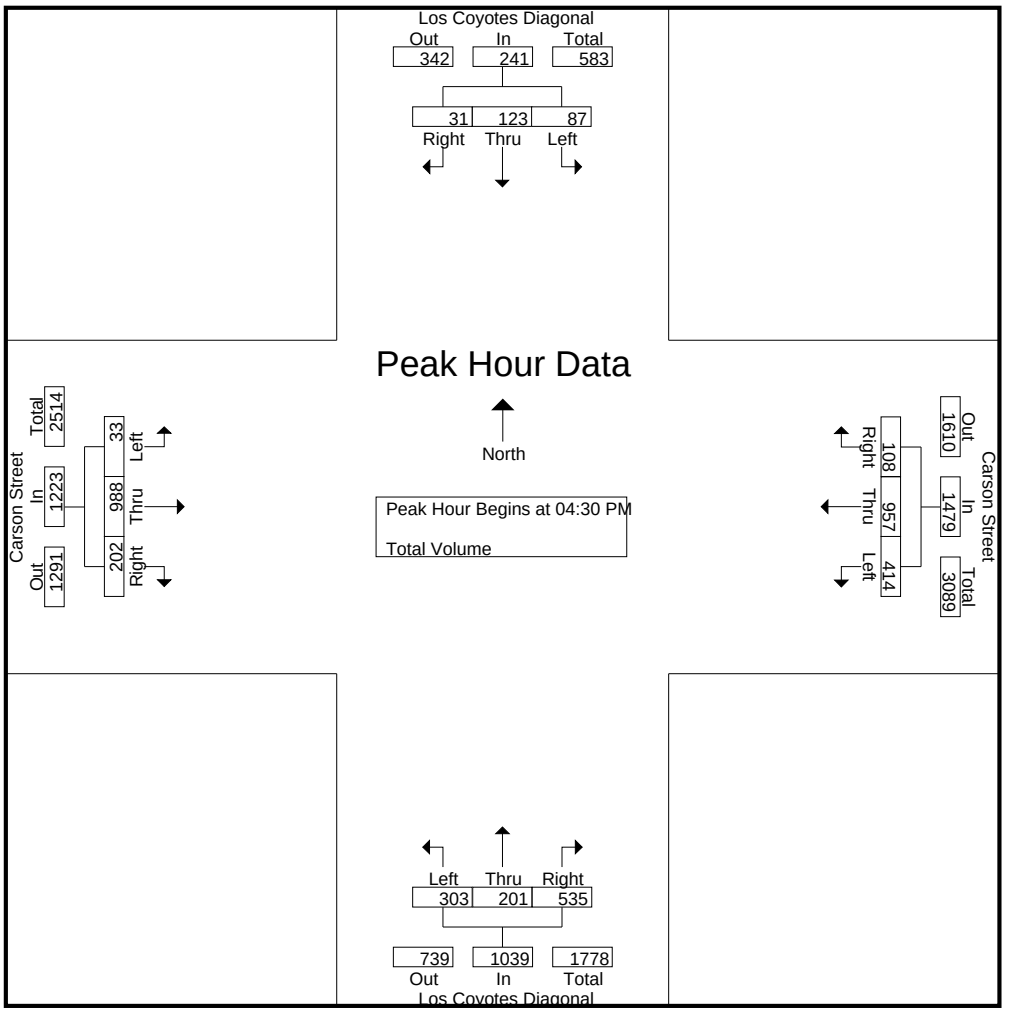

Peak Hour Analysis From 04:00 PM to 05:45 PM - Peak 1 of 1
Peak Hour for Each Approach Begins at:

	04:00 PM				04:30 PM				04:45 PM				04:00 PM			
+0 mins.	**26**	33	**13**	**72**	100	242	**30**	372	73	57	116	246	8	**268**	43	319
+15 mins.	22	**39**	4	65	**115**	**244**	28	**387**	77	42	**150**	269	6	227	57	290
+30 mins.	19	31	6	56	90	243	26	359	75	**61**	142	**278**	6	247	50	303
+45 mins.	20	30	12	62	109	228	24	361	**81**	39	139	259	**9**	253	**58**	**320**
Total Volume	87	133	35	255	414	957	108	1479	306	199	547	1052	29	995	208	1232
% App. Total	34.1	52.2	13.7		28	64.7	7.3		29.1	18.9	52		2.4	80.8	16.9	
PHF	.837	.853	.673	.885	.900	.981	.900	.955	.944	.816	.912	.946	.806	.928	.897	.963

City of Downey
Unique Auto Spa Oil & Lube
7624 Firestone Boulevard
24 Hour Driveway Counts
5/10/2017

	East Driveway		West Driveway		TOTAL			
	Entering	Exiting	Entering	Exiting	Entering	Exiting		
	SB	NB	SB	NB	SB	NB		
0:00	0	0	0	0	0	0	0	
0:15	0	0	0	0	0	0	0	
0:30	0	0	0	0	0	0	0	
0:45	0	0	0	0	0	0	0	
1:00	0	0	0	0	0	0	0	
1:15	0	0	0	0	0	0	0	
1:30	0	0	0	0	0	0	0	
1:45	0	0	0	0	0	0	0	
2:00	0	0	0	0	0	0	0	
2:15	0	0	0	0	0	0	0	
2:30	0	0	0	0	0	0	0	
2:45	0	0	0	0	0	0	0	
3:00	0	0	0	0	0	0	0	
3:15	0	0	0	0	0	0	0	
3:30	0	0	0	0	0	0	0	
3:45	0	0	0	0	0	0	0	
4:00	0	0	0	0	0	0	0	
4:15	0	0	0	0	0	0	0	
4:30	0	0	0	0	0	0	0	
4:45	0	0	0	0	0	0	0	
5:00	0	0	0	0	0	0	0	
5:15	0	0	0	0	0	0	0	
5:30	0	0	0	0	0	0	0	
5:45	0	0	0	0	0	0	0	
6:00	0	0	0	0	0	0	0	
6:15	0	0	0	0	0	0	0	
6:30	0	0	0	0	0	0	0	
6:45	0	0	1	0	1	0	1	
7:00	0	1	3	0	3	1	4	12
7:15	0	1	1	0	1	1	2	
7:30	0	0	2	0	2	0	2	
7:45	0	0	4	0	4	0	4	
8:00	1	1	1	2	2	3	5	
8:15	0	3	5	0	5	3	8	
8:30	1	3	5	3	6	6	12	
8:45	0	1	5	2	5	3	8	
9:00	0	1	1	0	1	1	2	
9:15	0	3	6	3	6	6	12	
9:30	0	0	1	2	1	2	3	
9:45	0	2	3	1	3	3	6	
10:00	0	1	4	4	4	5	9	
10:15	0	0	1	1	1	1	2	
10:30	0	1	6	1	6	2	8	
10:45	0	0	4	4	4	4	8	
11:00	0	0	12	4	12	4	16	
11:15	0	1	4	3	4	4	8	
11:30	0	2	2	1	2	3	5	
11:45	1	0	7	5	8	5	13	
12:00	0	1	9	5	9	6	15	
12:15	0	3	6	8	6	11	17	
12:30	0	6	6	3	6	9	15	
12:45	0	2	4	7	4	9	13	
13:00	1	3	5	3	6	6	12	
13:15	1	4	6	2	7	6	13	
13:30	0	0	4	3	4	3	7	
13:45	0	2	15	5	15	7	22	
14:00	0	2	8	5	8	7	15	
14:15	0	3	5	8	5	11	16	
14:30	0	2	8	3	8	5	13	
14:45	0	2	7	6	7	8	15	
15:00	0	5	10	5	10	10	20	
15:15	0	2	7	7	7	9	16	
15:30	0	0	4	3	4	3	7	
15:45	0	5	5	6	5	11	16	
16:00	0	0	6	4	6	4	10	15
16:15	0	3	4	4	4	7	11	
16:30	0	2	8	2	8	4	12	
16:45	0	3	3	3	3	6	9	
17:00	0	2	5	3	5	5	10	
17:15	1	1	7	6	8	7	15	
17:30	1	5	5	3	6	8	14	
17:45	0	4	4	4	4	8	12	
18:00	0	0	4	3	4	3	7	
18:15	0	1	4	1	4	2	6	
18:30	0	2	2	2	2	4	6	
18:45	0	2	6	5	6	7	13	
19:00	0	1	1	3	1	4	5	
19:15	0	3	0	2	0	5	5	
19:30	0	0	0	0	0	0	0	
19:45	0	0	1	1	1	1	2	
20:00	0	0	0	0	0	0	0	
20:15	0	0	0	0	0	0	0	
20:30	0	1	0	0	0	1	1	
20:45	0	0	0	0	0	0	0	
21:00	0	0	0	0	0	0	0	
21:15	0	0	0	0	0	0	0	
21:30	0	0	0	0	0	0	0	
21:45	0	0	0	0	0	0	0	
22:00	0	0	0	0	0	0	0	
22:15	0	0	0	0	0	0	0	
22:30	0	0	0	0	0	0	0	
22:45	0	0	0	0	0	0	0	
23:00	0	0	0	0	0	0	0	
23:15	0	0	0	0	0	0	0	
23:30	0	0	0	0	0	0	0	
23:45	0	0	0	0	0	0	0	
	7	93	247	161	254	254		

City of Whittier
11701 Whittier Boulevard
Pacific Auto Spa
24 Hour Driveway Counts
5/10/2017

	North Driveway		South Driveway		TOTAL			
	Entering	Exiting	Entering	Exiting	Entering	Exiting		
	WB	EB	WB	EB	WB	EB		
0:00	0	0	0	0	0	0	0	
0:15	0	0	0	0	0	0	0	
0:30	0	0	0	0	0	0	0	
0:45	0	0	0	0	0	0	0	
1:00	0	0	0	0	0	0	0	
1:15	0	0	0	0	0	0	0	
1:30	0	0	0	0	0	0	0	
1:45	0	0	0	0	0	0	0	
2:00	0	0	0	0	0	0	0	
2:15	0	0	0	0	0	0	0	
2:30	0	0	0	0	0	0	0	
2:45	0	0	0	0	0	0	0	
3:00	0	0	0	0	0	0	0	
3:15	0	0	0	0	0	0	0	
3:30	0	0	0	0	0	0	0	
3:45	0	0	0	0	0	0	0	
4:00	0	0	0	0	0	0	0	
4:15	0	0	0	0	0	0	0	
4:30	0	0	0	0	0	0	0	
4:45	0	0	0	0	0	0	0	
5:00	0	0	0	0	0	0	0	
5:15	0	0	0	0	0	0	0	
5:30	0	0	0	0	0	0	0	
5:45	0	0	0	0	0	0	0	
6:00	0	0	0	0	0	0	0	
6:15	0	0	0	0	0	0	0	
6:30	0	0	0	0	0	0	0	
6:45	0	0	0	0	0	0	0	
7:00	2	1	0	0	2	1	3	10
7:15	0	0	0	0	0	0	0	
7:30	0	0	0	0	0	0	0	
7:45	3	0	0	0	3	0	3	
8:00	2	0	1	0	3	0	3	
8:15	0	2	1	1	1	3	4	
8:30	0	1	1	0	1	1	2	
8:45	6	2	0	2	6	4	10	
9:00	6	1	1	1	7	2	9	
9:15	1	3	0	0	1	3	4	
9:30	2	2	0	1	2	3	5	
9:45	1	3	2	0	3	3	6	
10:00	1	2	0	0	1	2	3	
10:15	1	2	1	1	2	3	5	
10:30	2	3	2	1	4	4	8	
10:45	5	6	2	2	7	8	15	
11:00	0	0	0	0	0	0	0	
11:15	0	1	0	0	0	1	1	
11:30	0	0	0	0	0	0	0	
11:45	0	0	0	0	0	0	0	
12:00	0	0	1	1	1	1	2	
12:15	1	0	0	0	1	0	1	
12:30	0	0	1	2	1	2	3	
12:45	0	0	0	1	0	1	1	
13:00	0	0	0	1	0	1	1	
13:15	0	0	1	1	1	1	2	
13:30	0	0	0	0	0	0	0	
13:45	0	0	0	1	0	1	1	
14:00	0	0	0	1	0	1	1	
14:15	0	0	0	0	0	0	0	
14:30	0	0	1	0	1	0	1	
14:45	0	1	0	0	0	1	1	
15:00	0	0	0	0	0	0	0	
15:15	0	1	0	0	0	1	1	
15:30	0	0	0	0	0	0	0	
15:45	0	0	0	0	0	0	0	
16:00	0	0	1	0	1	0	1	1
16:15	0	0	0	0	0	0	0	
16:30	0	0	0	1	0	1	1	
16:45	0	0	0	0	0	0	0	
17:00	0	0	0	0	0	0	0	
17:15	0	0	0	0	0	0	0	
17:30	0	0	0	0	0	0	0	
17:45	0	0	0	0	0	0	0	
18:00	0	0	0	0	0	0	0	
18:15	0	0	0	0	0	0	0	
18:30	0	0	0	0	0	0	0	
18:45	0	0	0	0	0	0	0	
19:00	0	0	0	0	0	0	0	
19:15	0	0	0	0	0	0	0	
19:30	0	0	0	0	0	0	0	
19:45	0	0	0	0	0	0	0	
20:00	0	0	0	0	0	0	0	
20:15	0	0	0	0	0	0	0	
20:30	0	0	0	0	0	0	0	
20:45	0	0	0	0	0	0	0	
21:00	0	0	0	0	0	0	0	
21:15	0	0	0	0	0	0	0	
21:30	0	0	0	0	0	0	0	
21:45	0	0	0	0	0	0	0	
22:00	0	0	0	0	0	0	0	
22:15	0	0	0	0	0	0	0	
22:30	0	0	0	0	0	0	0	
22:45	0	0	0	0	0	0	0	
23:00	0	0	0	0	0	0	0	
23:15	0	0	0	0	0	0	0	
23:30	0	0	0	0	0	0	0	
23:45	0	0	0	0	0	0	0	
	33	31	16	18	49	49		

City of Anaheim
5810 La Palma Avenue
Anaheim Hills Car Wash
24 Hour Driveway Counts
5/10/2017

	East Driveway			West Driveway			TOTAL					
	Entering	Exiting		Entering	Exiting		Entering	Exiting				
	SB	NB		SB	NB		SB	NB				
0:00	0	0	0:00	0	0	0:00	0	0	0			
0:15	0	0	0:15	0	0	0:15	0	0	0			
0:30	0	0	0:30	0	0	0:30	0	0	0			
0:45	0	0	0:45	0	0	0:45	0	0	0			
1:00	0	0	1:00	0	0	1:00	0	0	0			
1:15	0	0	1:15	0	0	1:15	0	0	0			
1:30	0	0	1:30	0	0	1:30	0	0	0			
1:45	0	0	1:45	0	0	1:45	0	0	0			
2:00	0	0	2:00	0	0	2:00	0	0	0			
2:15	0	0	2:15	0	0	2:15	0	0	0			
2:30	0	0	2:30	0	0	2:30	0	0	0			
2:45	0	0	2:45	0	0	2:45	0	0	0			
3:00	0	0	3:00	0	0	3:00	0	0	0			
3:15	0	0	3:15	0	0	3:15	0	0	0			
3:30	0	0	3:30	0	0	3:30	0	0	0			
3:45	0	0	3:45	0	0	3:45	0	0	0			
4:00	0	0	4:00	0	0	4:00	0	0	0			
4:15	0	0	4:15	0	0	4:15	0	0	0			
4:30	0	0	4:30	0	0	4:30	0	0	0			
4:45	0	0	4:45	1	0	4:45	1	0	1			
5:00	0	0	5:00	0	0	5:00	0	0	0			
5:15	0	0	5:15	0	0	5:15	0	0	0			
5:30	0	0	5:30	0	0	5:30	0	0	0			
5:45	0	0	5:45	0	0	5:45	0	0	0			
6:00	1	1	6:00	0	0	6:00	0	0	0			
6:15	0	0	6:15	0	0	6:15	1	1	2			
6:30	0	0	6:30	1	0	6:30	1	0	1			
6:45	1	0	6:45	2	0	6:45	2	0	2			
7:00	1	0	7:00	3	0	7:00	4	0	4	6	9.333333	
7:15	0	0	7:15	2	0	7:15	3	0	3			
7:30	0	1	7:30	2	0	7:30	2	0	2			
7:45	1	0	7:45	2	0	7:45	2	1	3			
8:00	1	2	8:00	1	0	8:00	2	0	2			
8:15	1	0	8:15	3	0	8:15	4	2	6			
8:30	0	1	8:30	0	0	8:30	1	0	1			
8:45	1	2	8:45	2	0	8:45	2	1	3			
9:00	0	1	9:00	6	0	9:00	7	2	9			
9:15	0	1	9:15	0	0	9:15	0	1	1			
9:30	0	5	9:30	1	1	9:30	1	2	3			
9:45	1	3	9:45	2	1	9:45	2	6	8			
10:00	1	2	10:00	4	0	10:00	5	3	8			
10:15	0	3	10:15	2	0	10:15	3	2	5			
10:30	1	0	10:30	1	0	10:30	1	3	4			
10:45	0	6	10:45	2	0	10:45	3	0	3			
11:00	1	2	11:00	2	0	11:00	2	6	8			
11:15	2	4	11:15	4	0	11:15	5	2	7			
11:30	0	5	11:30	1	0	11:30	3	4	7			
11:45	2	5	11:45	2	0	11:45	2	5	7			
12:00	1	4	12:00	3	1	12:00	5	6	11			
12:15	1	1	12:15	4	1	12:15	5	5	10			
12:30	1	4	12:30	1	0	12:30	2	1	3			
12:45	0	2	12:45	2	0	12:45	3	4	7			
13:00	0	1	13:00	2	0	13:00	2	2	4			
13:15	0	1	13:15	0	0	13:15	0	1	1			
13:30	0	2	13:30	2	0	13:30	2	1	3			
13:45	0	2	13:45	2	0	13:45	2	2	4			
14:00	2	3	14:00	2	1	14:00	2	3	5			
14:15	3	3	14:15	3	1	14:15	5	4	9			
14:30	0	7	14:30	2	0	14:30	5	3	8			
14:45	2	4	14:45	6	0	14:45	6	7	13			
15:00	1	3	15:00	3	0	15:00	5	4	9			
15:15	0	3	15:15	1	0	15:15	2	3	5			
15:30	1	1	15:30	2	0	15:30	2	3	5			
15:45	0	3	15:45	1	0	15:45	2	1	3			
16:00	0	1	16:00	0	0	16:00	0	3	3	11	9	
16:15	0	4	16:15	0	0	16:15	0	1	1			
16:30	0	2	16:30	2	1	16:30	2	5	7			
16:45	0	5	16:45	0	0	16:45	0	2	2			
17:00	0	2	17:00	4	2	17:00	4	7	11			
17:15	0	2	17:15	1	0	17:15	1	2	3			
17:30	0	2	17:30	2	1	17:30	2	3	5			
17:45	0	0	17:45	0	0	17:45	0	2	2			
18:00	0	0	18:00	0	0	18:00	0	0	0			
18:15	0	0	18:15	0	0	18:15	0	0	0			
18:30	0	2	18:30	0	0	18:30	0	0	0			
18:45	0	0	18:45	0	0	18:45	0	2	2			
19:00	0	0	19:00	0	0	19:00	0	0	0			
19:15	0	0	19:15	0	0	19:15	0	0	0			
19:30	0	1	19:30	1	0	19:30	1	0	1			
19:45	0	0	19:45	0	0	19:45	0	1	1			
20:00	0	0	20:00	0	0	20:00	0	0	0			
20:15	0	0	20:15	0	0	20:15	0	0	0			
20:30	0	0	20:30	0	0	20:30	0	0	0			
20:45	0	0	20:45	0	0	20:45	0	0	0			
21:00	0	0	21:00	0	0	21:00	0	0	0			
21:15	0	0	21:15	0	0	21:15	0	0	0			
21:30	0	0	21:30	0	0	21:30	0	0	0			
21:45	0	0	21:45	0	0	21:45	0	0	0			
22:00	0	0	22:00	0	0	22:00	0	0	0			
22:15	0	0	22:15	0	0	22:15	0	0	0			
22:30	0	0	22:30	0	0	22:30	0	0	0			
22:45	0	0	22:45	0	0	22:45	0	0	0			
23:00	0	0	23:00	0	0	23:00	0	0	0			
23:15	0	0	23:15	0	0	23:15	0	0	0			
23:30	0	0	23:30	0	0	23:30	0	0	0			
23:45	0	0	23:45	0	0	23:45	0	0	0			
	27	109		92	10		119	119				

APPENDIX B:
VOLUME DEVELOPMENT WORKSHEETS

translutions
the transportation solutions company...

Table B-1 - Existing Peak Hour Volume Summary

	AM Peak Hour			PM Peak Hour		
	Existing (2017) PCE	Project Trips	Existing With Project	Existing (2017) PCE	Project Trips	Existing With Project
1 . Project Driveway 1/Carson Street						
NBL		0	0		0	0
NBT		0	0		0	0
NBR		0	0		0	0
SBL		0	0		0	0
SBT		0	0		0	0
SBR		5	5		5	5
EBL		0	0		0	0
EBT	793	6	799	1,223	6	1,229
EBR		0	0		0	0
WBL		0	0		0	0
WBT	1,353	0	1,353	1,291	0	1,291
WBR		0	0		0	0
North Leg						
Approach	0	5	5	0	5	5
Departure	0	0	0	0	0	0
Total	0	5	5	0	5	5
South Leg						
Approach	0	0	0	0	0	0
Departure	0	0	0	0	0	0
Total	0	0	0	0	0	0
East Leg						
Approach	1,353	0	1,353	1,291	0	1,291
Departure	793	6	799	1,223	6	1,229
Total	2,146	6	2,152	2,514	6	2,520
West Leg						
Approach	793	6	799	1,223	6	1,229
Departure	1,353	5	1,358	1,291	5	1,296
Total	2,146	11	2,157	2,514	11	2,525
Total Approaches						
Approach	2,146	11	2,157	2,514	11	2,525
Departure	2,146	11	2,157	2,514	11	2,525
Total	4,292	22	4,314	5,028	22	5,050

translutions
the transportation solutions company...

Table B-1 - Existing Peak Hour Volume Summary

	AM Peak Hour			PM Peak Hour		
	Existing (2017) PCE	Project Trips	Existing With Project	Existing (2017) PCE	Project Trips	Existing With Project
2 . Project Driveway 2/Carson Street						
NBL		0	0		0	0
NBT		0	0		0	0
NBR		0	0		0	0
SBL		0	0		0	0
SBT		0	0		0	0
SBR		0	0		0	0
EBL		2	2		2	2
EBT	793	4	797	1,223	4	1,227
EBR		0	0		0	0
WBL		0	0		0	0
WBT	1,353	0	1,353	1,291	0	1,291
WBR		4	4		5	5
North Leg						
Approach	0	0	0	0	0	0
Departure	0	6	6	0	7	7
Total	0	6	6	0	7	7
South Leg						
Approach	0	0	0	0	0	0
Departure	0	0	0	0	0	0
Total	0	0	0	0	0	0
East Leg						
Approach	1,353	4	1,357	1,291	5	1,296
Departure	793	4	797	1,223	4	1,227
Total	2,146	8	2,154	2,514	9	2,523
West Leg						
Approach	793	6	799	1,223	6	1,229
Departure	1,353	0	1,353	1,291	0	1,291
Total	2,146	6	2,152	2,514	6	2,520
Total Approaches						
Approach	2,146	10	2,156	2,514	11	2,525
Departure	2,146	10	2,156	2,514	11	2,525
Total	4,292	20	4,312	5,028	22	5,050

translutions
the transportation solutions company...

Table B-1 - Existing Peak Hour Volume Summary

	AM Peak Hour			PM Peak Hour		
	Existing (2017) PCE	Project Trips	Existing With Project	Existing (2017) PCE	Project Trips	Existing With Project
3 . Los Coyotes Diagonal/Carson Street						
NBL	252	1	253	303	2	305
NBT	103	0	103	201	0	201
NBR	352	0	352	535	0	535
SBL	67	0	67	87	0	87
SBT	207	0	207	123	0	123
SBR	23	1	24	31	2	33
EBL	8	1	9	33	1	34
EBT	469	1	470	988	1	989
EBR	316	1	317	202	1	203
WBL	490	0	490	414	0	414
WBT	1,078	2	1,080	957	2	959
WBR	41	0	41	108	0	108
North Leg						
Approach	297	1	298	241	2	243
Departure	152	1	153	342	1	343
Total	449	2	451	583	3	586
South Leg						
Approach	707	1	708	1,039	2	1,041
Departure	1,013	1	1,014	739	1	740
Total	1,720	2	1,722	1,778	3	1,781
East Leg						
Approach	1,609	2	1,611	1,479	2	1,481
Departure	888	1	889	1,610	1	1,611
Total	2,497	3	2,500	3,089	3	3,092
West Leg						
Approach	793	3	796	1,223	3	1,226
Departure	1,353	4	1,357	1,291	6	1,297
Total	2,146	7	2,153	2,514	9	2,523
Total Approaches						
Approach	3,406	7	3,413	3,982	9	3,991
Departure	3,406	7	3,413	3,982	9	3,991
Total	6,812	14	6,826	7,964	18	7,982

translutions
the transportation solutions company...

Table B-2 - Cumulative (2018) Peak Hour Volume Summary

	AM Peak Hour						PM Peak Hour					
	Existing 2,017	Growth	Cumul. Projects	Cumul. No Proj.	Project Trips	Cumul. W Proj.	Existing 2,017	Growth	Cumul. Projects	Cumul. No Proj.	Project Trips	Cumul. W Proj.
1 . Project Driveway 1/Carson Street												
NBL	0	0	0	0	0	0	0	0	0	0	0	0
NBT	0	0	0	0	0	0	0	0	0	0	0	0
NBR	0	0	0	0	0	0	0	0	0	0	0	0
SBL	0	0	0	0	0	0	0	0	0	0	0	0
SBT	0	0	0	0	0	0	0	0	0	0	0	0
SBR	0	0	0	0	5	5	0	0	0	0	5	5
EBL	0	0	0	0	0	0	0	0	0	0	0	0
EBT	793	8	231	1,032	6	1,038	1,223	12	206	1,441	6	1,447
EBR	0	0	0	0	0	0	0	0	0	0	0	0
WBL	0	0	0	0	0	0	0	0	0	0	0	0
WBT	1,353	14	189	1,556	0	1,556	1,291	13	181	1,485	0	1,485
WBR	0	0	0	0	0	0	0	0	0	0	0	0
North Leg												
	0	0	0	0	5	5	0	0	0	0	5	5
	0	0	0	0	0	0	0	0	0	0	0	0
	0	0	0	0	5	5	0	0	0	0	5	5
South Leg												
	0	0	0	0	0	0	0	0	0	0	0	0
	0	0	0	0	0	0	0	0	0	0	0	0
	0	0	0	0	0	0	0	0	0	0	0	0
East Leg												
	1,353	14	189	1,556	0	1,556	1,291	13	181	1,485	0	1,485
	793	8	231	1,032	6	1,038	1,223	12	206	1,441	6	1,447
	2,146	22	420	2,588	6	2,594	2,514	25	387	2,926	6	2,932
West Leg												
	793	8	231	1,032	6	1,038	1,223	12	206	1,441	6	1,447
	1,353	14	189	1,556	5	1,561	1,291	13	181	1,485	5	1,490
	2,146	22	420	2,588	11	2,599	2,514	25	387	2,926	11	2,937
Total Approaches												
Approacl	2,146	22	420	2,588	11	2,599	2,514	25	387	2,926	11	2,937
Departur	2,146	22	420	2,588	11	2,599	2,514	25	387	2,926	11	2,937
Total	4,292	44	840	5,176	22	5,198	5,028	50	774	5,852	22	5,874

translutions
the transportation solutions company...

Table B-2 - Cumulative (2018) Peak Hour Volume Summary

	AM Peak Hour						PM Peak Hour					
	Existing 2,017	Growth	Cumul. Projects	Cumul. No Proj.	Project Trips	Cumul. W Proj.	Existing 2,017	Growth	Cumul. Projects	Cumul. No Proj.	Project Trips	Cumul. W Proj.
2 . Project Driveway 2/Carson Street												
NBL	0	0	0	0	0	0	0	0	0	0	0	0
NBT	0	0	0	0	0	0	0	0	0	0	0	0
NBR	0	0	0	0	0	0	0	0	0	0	0	0
SBL	0	0	0	0	0	0	0	0	0	0	0	0
SBT	0	0	0	0	0	0	0	0	0	0	0	0
SBR	0	0	0	0	0	0	0	0	0	0	0	0
EBL	0	0	0	0	2	2	0	0	0	0	2	2
EBT	793	8	231	1,032	4	1,036	1,223	12	206	1,441	4	1,445
EBR	0	0	0	0	0	0	0	0	0	0	0	0
WBL	0	0	0	0	0	0	0	0	0	0	0	0
WBT	1,353	14	189	1,556	0	1,556	1,291	13	181	1,485	0	1,485
WBR	0	0	0	0	4	4	0	0	0	0	5	5
North Leg												
Approacl	0	0	0	0	0	0	0	0	0	0	0	0
Departur	0	0	0	0	6	6	0	0	0	0	7	7
Total	0	0	0	0	6	6	0	0	0	0	7	7
South Leg												
Approacl	0	0	0	0	0	0	0	0	0	0	0	0
Departur	0	0	0	0	0	0	0	0	0	0	0	0
Total	0	0	0	0	0	0	0	0	0	0	0	0
East Leg												
Approacl	1,353	14	189	1,556	4	1,560	1,291	13	181	1,485	5	1,490
Departur	793	8	231	1,032	4	1,036	1,223	12	206	1,441	4	1,445
Total	2,146	22	420	2,588	8	2,596	2,514	25	387	2,926	9	2,935
West Leg												
Approacl	793	8	231	1,032	6	1,038	1,223	12	206	1,441	6	1,447
Departur	1,353	14	189	1,556	0	1,556	1,291	13	181	1,485	0	1,485
Total	2,146	22	420	2,588	6	2,594	2,514	25	387	2,926	6	2,932
Total Approaches												
Approacl	2,146	22	420	2,588	10	2,598	2,514	25	387	2,926	11	2,937
Departur	2,146	22	420	2,588	10	2,598	2,514	25	387	2,926	11	2,937
Total	4,292	44	840	5,176	20	5,196	5,028	50	774	5,852	22	5,874

translutions
the transportation solutions company...

Table B-2 - Cumulative (2018) Peak Hour Volume Summary

	AM Peak Hour						PM Peak Hour					
	Existing 2,017	Growth	Cumul. Projects	Cumul. No Proj.	Project Trips	Cumul. W Proj.	Existing 2,017	Growth	Cumul. Projects	Cumul. No Proj.	Project Trips	Cumul. W Proj.
3 . Los Coyotes Diagonal/Carson Street												
NBL	252	3	9	264	1	265	303	3	4	310	2	312
NBT	103	1	0	104	0	104	201	2	0	203	0	203
NBR	352	4	0	356	0	356	535	5	0	540	0	540
SBL	67	1	0	68	0	68	87	1	1	89	0	89
SBT	207	2	0	209	0	209	123	1	0	124	0	124
SBR	23	0	9	32	1	33	31	0	5	36	2	38
EBL	8	0	24	32	1	33	33	0	9	42	1	43
EBT	469	5	197	671	1	672	988	10	193	1,191	1	1,192
EBR	316	3	11	330	1	331	202	2	4	208	1	209
WBL	490	5	0	495	0	495	414	4	0	418	0	418
WBT	1,078	11	153	1,242	2	1,244	957	10	167	1,134	2	1,136
WBR	41	0	1	42	0	42	108	1	0	109	0	109
North Leg												
Approacl	297	3	9	309	1	310	241	2	6	249	2	251
Departur	152	1	25	178	1	179	342	3	9	354	1	355
Total	449	4	34	487	2	489	583	5	15	603	3	606
South Leg												
Approacl	707	8	9	724	1	725	1,039	10	4	1,053	2	1,055
Departur	1,013	10	11	1,034	1	1,035	739	7	4	750	1	751
Total	1,720	18	20	1,758	2	1,760	1,778	17	8	1,803	3	1,806
East Leg												
Approacl	1,609	16	154	1,779	2	1,781	1,479	15	167	1,661	2	1,663
Departur	888	10	197	1,095	1	1,096	1,610	16	194	1,820	1	1,821
Total	2,497	26	351	2,874	3	2,877	3,089	31	361	3,481	3	3,484
West Leg												
Approacl	793	8	232	1,033	3	1,036	1,223	12	206	1,441	3	1,444
Departur	1,353	14	171	1,538	4	1,542	1,291	13	176	1,480	6	1,486
Total	2,146	22	403	2,571	7	2,578	2,514	25	382	2,921	9	2,930
Total Approaches												
Approacl	3,406	35	404	3,845	7	3,852	3,982	39	383	4,404	9	4,413
Departur	3,406	35	404	3,845	7	3,852	3,982	39	383	4,404	9	4,413
Total	6,812	70	808	7,690	14	7,704	7,964	78	766	8,808	18	8,826

APPENDIX C:
LEVEL OF SERVICE WORKSHEETS

Intersection	
Int Delay, s/veh	0

Movement	EBL	EBT	WBT	WBR	SBL	SBR
Lane Configurations		↑↑↑	↑↑↑↱			↱
Traffic Vol, veh/h	0	799	1353	0	0	5
Future Vol, veh/h	0	799	1353	0	0	5
Conflicting Peds, #/hr	0	0	0	0	0	0
Sign Control	Free	Free	Free	Free	Stop	Stop
RT Channelized	-	None	-	None	-	None
Storage Length	-	-	-	-	-	0
Veh in Median Storage, #	-	0	0	-	0	-
Grade, %	-	0	0	-	0	-
Peak Hour Factor	92	92	92	92	92	92
Heavy Vehicles, %	0	0	0	0	0	0
Mvmt Flow	0	868	1471	0	0	5

Major/Minor	Major1		Major2		Minor2	
Conflicting Flow All	-	0	-	0	-	736
Stage 1	-	-	-	-	-	-
Stage 2	-	-	-	-	-	-
Critical Hdwy	-	-	-	-	-	7.1
Critical Hdwy Stg 1	-	-	-	-	-	-
Critical Hdwy Stg 2	-	-	-	-	-	-
Follow-up Hdwy	-	-	-	-	-	3.9
Pot Cap-1 Maneuver	0	-	-	-	0	314
Stage 1	0	-	-	-	0	-
Stage 2	0	-	-	-	0	-
Platoon blocked, %		-	-	-		
Mov Cap-1 Maneuver	-	-	-	-	-	314
Mov Cap-2 Maneuver	-	-	-	-	-	-
Stage 1	-	-	-	-	-	-
Stage 2	-	-	-	-	-	-

Approach	EB	WB	SB
HCM Control Delay, s	0	0	16.7
HCM LOS			C

Minor Lane/Major Mvmt	EBT	WBT	WBR	SBLn1
Capacity (veh/h)	-	-	-	314
HCM Lane V/C Ratio	-	-	-	0.017
HCM Control Delay (s)	-	-	-	16.7
HCM Lane LOS	-	-	-	C
HCM 95th %tile Q(veh)	-	-	-	0.1

Intersection	
Int Delay, s/veh	0

Movement	EBL	EBT	WBT	WBR	SBL	SBR
Lane Configurations						
Traffic Vol, veh/h	2	797	1353	4	0	0
Future Vol, veh/h	2	797	1353	4	0	0
Conflicting Peds, #/hr	0	0	0	0	0	0
Sign Control	Free	Free	Free	Free	Stop	Stop
RT Channelized	-	None	-	None	-	None
Storage Length	75	-	-	-	-	0
Veh in Median Storage, #	-	0	0	-	0	-
Grade, %	-	0	0	-	0	-
Peak Hour Factor	92	92	92	92	92	92
Heavy Vehicles, %	0	0	0	0	0	0
Mvmt Flow	2	866	1471	4	0	0

Major/Minor	Major1		Major2		Minor2	
Conflicting Flow All	1475	0	-	0	-	738
Stage 1	-	-	-	-	-	-
Stage 2	-	-	-	-	-	-
Critical Hdwy	5.3	-	-	-	-	7.1
Critical Hdwy Stg 1	-	-	-	-	-	-
Critical Hdwy Stg 2	-	-	-	-	-	-
Follow-up Hdwy	3.1	-	-	-	-	3.9
Pot Cap-1 Maneuver	234	-	-	-	0	313
Stage 1	-	-	-	-	0	-
Stage 2	-	-	-	-	0	-
Platoon blocked, %		-	-	-		
Mov Cap-1 Maneuver	234	-	-	-	-	313
Mov Cap-2 Maneuver	-	-	-	-	-	-
Stage 1	-	-	-	-	-	-
Stage 2	-	-	-	-	-	-

Approach	EB	WB	SB
HCM Control Delay, s	0.1	0	0
HCM LOS			A

Minor Lane/Major Mvmt	EBL	EBT	WBT	WBR	SBLn1
Capacity (veh/h)	234	-	-	-	-
HCM Lane V/C Ratio	0.009	-	-	-	-
HCM Control Delay (s)	20.5	-	-	-	0
HCM Lane LOS	C	-	-	-	A
HCM 95th %tile Q(veh)	0	-	-	-	-

Intersection	
Int Delay, s/veh	0

Movement	EBL	EBT	WBT	WBR	SBL	SBR
Lane Configurations		↑↑↑	↑↑↑↳			↱
Traffic Vol, veh/h	0	1229	1291	0	0	5
Future Vol, veh/h	0	1229	1291	0	0	5
Conflicting Peds, #/hr	0	0	0	0	0	0
Sign Control	Free	Free	Free	Free	Stop	Stop
RT Channelized	-	None	-	None	-	None
Storage Length	-	-	-	-	-	0
Veh in Median Storage, #	-	0	0	-	0	-
Grade, %	-	0	0	-	0	-
Peak Hour Factor	92	92	92	92	92	92
Heavy Vehicles, %	0	0	0	0	0	0
Mvmt Flow	0	1336	1403	0	0	5

Major/Minor	Major1		Major2		Minor2	
Conflicting Flow All	-	0	-	0	-	702
Stage 1	-	-	-	-	-	-
Stage 2	-	-	-	-	-	-
Critical Hdwy	-	-	-	-	-	7.1
Critical Hdwy Stg 1	-	-	-	-	-	-
Critical Hdwy Stg 2	-	-	-	-	-	-
Follow-up Hdwy	-	-	-	-	-	3.9
Pot Cap-1 Maneuver	0	-	-	-	0	330
Stage 1	0	-	-	-	0	-
Stage 2	0	-	-	-	0	-
Platoon blocked, %		-	-	-		
Mov Cap-1 Maneuver	-	-	-	-	-	330
Mov Cap-2 Maneuver	-	-	-	-	-	-
Stage 1	-	-	-	-	-	-
Stage 2	-	-	-	-	-	-

Approach	EB	WB	SB
HCM Control Delay, s	0	0	16.1
HCM LOS			C

Minor Lane/Major Mvmt	EBT	WBT	WBR	SBLn1
Capacity (veh/h)	-	-	-	330
HCM Lane V/C Ratio	-	-	-	0.016
HCM Control Delay (s)	-	-	-	16.1
HCM Lane LOS	-	-	-	C
HCM 95th %tile Q(veh)	-	-	-	0.1

Intersection	
Int Delay, s/veh	0

Movement	EBL	EBT	WBT	WBR	SBL	SBR
Lane Configurations						
Traffic Vol, veh/h	2	1227	1291	5	0	0
Future Vol, veh/h	2	1227	1291	5	0	0
Conflicting Peds, #/hr	0	0	0	0	0	0
Sign Control	Free	Free	Free	Free	Stop	Stop
RT Channelized	-	None	-	None	-	None
Storage Length	75	-	-	-	-	0
Veh in Median Storage, #	-	0	0	-	0	-
Grade, %	-	0	0	-	0	-
Peak Hour Factor	92	92	92	92	92	92
Heavy Vehicles, %	0	0	0	0	0	0
Mvmt Flow	2	1334	1403	5	0	0

Major/Minor	Major1		Major2		Minor2	
Conflicting Flow All	1408	0	-	0	-	704
Stage 1	-	-	-	-	-	-
Stage 2	-	-	-	-	-	-
Critical Hdwy	5.3	-	-	-	-	7.1
Critical Hdwy Stg 1	-	-	-	-	-	-
Critical Hdwy Stg 2	-	-	-	-	-	-
Follow-up Hdwy	3.1	-	-	-	-	3.9
Pot Cap-1 Maneuver	252	-	-	-	0	329
Stage 1	-	-	-	-	0	-
Stage 2	-	-	-	-	0	-
Platoon blocked, %		-	-	-		
Mov Cap-1 Maneuver	252	-	-	-	-	329
Mov Cap-2 Maneuver	-	-	-	-	-	-
Stage 1	-	-	-	-	-	-
Stage 2	-	-	-	-	-	-

Approach	EB	WB	SB
HCM Control Delay, s	0	0	0
HCM LOS			A

Minor Lane/Major Mvmt	EBL	EBT	WBT	WBR	SBLn1
Capacity (veh/h)	252	-	-	-	-
HCM Lane V/C Ratio	0.009	-	-	-	-
HCM Control Delay (s)	19.4	-	-	-	0
HCM Lane LOS	C	-	-	-	A
HCM 95th %tile Q(veh)	0	-	-	-	-

Intersection	
Int Delay, s/veh	0

Movement	EBL	EBT	WBT	WBR	SBL	SBR
Lane Configurations		↑↑↑	↑↑↑↱			↱
Traffic Vol, veh/h	0	1038	1556	0	0	5
Future Vol, veh/h	0	1038	1556	0	0	5
Conflicting Peds, #/hr	0	0	0	0	0	0
Sign Control	Free	Free	Free	Free	Stop	Stop
RT Channelized	-	None	-	None	-	None
Storage Length	-	-	-	-	-	0
Veh in Median Storage, #	-	0	0	-	0	-
Grade, %	-	0	0	-	0	-
Peak Hour Factor	92	92	92	92	92	92
Heavy Vehicles, %	0	0	0	0	0	0
Mvmt Flow	0	1128	1691	0	0	5

Major/Minor	Major1		Major2		Minor2	
Conflicting Flow All	-	0	-	0	-	846
Stage 1	-	-	-	-	-	-
Stage 2	-	-	-	-	-	-
Critical Hdwy	-	-	-	-	-	7.1
Critical Hdwy Stg 1	-	-	-	-	-	-
Critical Hdwy Stg 2	-	-	-	-	-	-
Follow-up Hdwy	-	-	-	-	-	3.9
Pot Cap-1 Maneuver	0	-	-	-	0	266
Stage 1	0	-	-	-	0	-
Stage 2	0	-	-	-	0	-
Platoon blocked, %		-	-	-		
Mov Cap-1 Maneuver	-	-	-	-	-	266
Mov Cap-2 Maneuver	-	-	-	-	-	-
Stage 1	-	-	-	-	-	-
Stage 2	-	-	-	-	-	-

Approach	EB	WB	SB
HCM Control Delay, s	0	0	18.8
HCM LOS			C

Minor Lane/Major Mvmt	EBT	WBT	WBR	SBLn1
Capacity (veh/h)	-	-	-	266
HCM Lane V/C Ratio	-	-	-	0.02
HCM Control Delay (s)	-	-	-	18.8
HCM Lane LOS	-	-	-	C
HCM 95th %tile Q(veh)	-	-	-	0.1

Intersection	
Int Delay, s/veh	0

Movement	EBL	EBT	WBT	WBR	SBL	SBR
Lane Configurations						
Traffic Vol, veh/h	2	1036	1556	4	0	0
Future Vol, veh/h	2	1036	1556	4	0	0
Conflicting Peds, #/hr	0	0	0	0	0	0
Sign Control	Free	Free	Free	Free	Stop	Stop
RT Channelized	-	None	-	None	-	None
Storage Length	75	-	-	-	-	0
Veh in Median Storage, #	-	0	0	-	0	-
Grade, %	-	0	0	-	0	-
Peak Hour Factor	92	92	92	92	92	92
Heavy Vehicles, %	0	0	0	0	0	0
Mvmt Flow	2	1126	1691	4	0	0

Major/Minor	Major1		Major2		Minor2	
Conflicting Flow All	1695	0	-	0	-	848
Stage 1	-	-	-	-	-	-
Stage 2	-	-	-	-	-	-
Critical Hdwy	5.3	-	-	-	-	7.1
Critical Hdwy Stg 1	-	-	-	-	-	-
Critical Hdwy Stg 2	-	-	-	-	-	-
Follow-up Hdwy	3.1	-	-	-	-	3.9
Pot Cap-1 Maneuver	182	-	-	-	0	265
Stage 1	-	-	-	-	0	-
Stage 2	-	-	-	-	0	-
Platoon blocked, %		-	-	-		
Mov Cap-1 Maneuver	182	-	-	-	-	265
Mov Cap-2 Maneuver	-	-	-	-	-	-
Stage 1	-	-	-	-	-	-
Stage 2	-	-	-	-	-	-

Approach	EB	WB	SB
HCM Control Delay, s	0	0	0
HCM LOS			A

Minor Lane/Major Mvmt	EBL	EBT	WBT	WBR	SBLn1
Capacity (veh/h)	182	-	-	-	-
HCM Lane V/C Ratio	0.012	-	-	-	-
HCM Control Delay (s)	25	-	-	-	0
HCM Lane LOS	D	-	-	-	A
HCM 95th %tile Q(veh)	0	-	-	-	-

Intersection	
Int Delay, s/veh	0

Movement	EBL	EBT	WBT	WBR	SBL	SBR
Lane Configurations		↑↑↑	↑↑↑↱			↱
Traffic Vol, veh/h	0	1447	1485	0	0	5
Future Vol, veh/h	0	1447	1485	0	0	5
Conflicting Peds, #/hr	0	0	0	0	0	0
Sign Control	Free	Free	Free	Free	Stop	Stop
RT Channelized	-	None	-	None	-	None
Storage Length	-	-	-	-	-	0
Veh in Median Storage, #	-	0	0	-	0	-
Grade, %	-	0	0	-	0	-
Peak Hour Factor	92	92	92	92	92	92
Heavy Vehicles, %	0	0	0	0	0	0
Mvmt Flow	0	1573	1614	0	0	5

Major/Minor	Major1		Major2		Minor2	
Conflicting Flow All	-	0	-	0	-	807
Stage 1	-	-	-	-	-	-
Stage 2	-	-	-	-	-	-
Critical Hdwy	-	-	-	-	-	7.1
Critical Hdwy Stg 1	-	-	-	-	-	-
Critical Hdwy Stg 2	-	-	-	-	-	-
Follow-up Hdwy	-	-	-	-	-	3.9
Pot Cap-1 Maneuver	0	-	-	-	0	282
Stage 1	0	-	-	-	0	-
Stage 2	0	-	-	-	0	-
Platoon blocked, %		-	-	-		
Mov Cap-1 Maneuver	-	-	-	-	-	282
Mov Cap-2 Maneuver	-	-	-	-	-	-
Stage 1	-	-	-	-	-	-
Stage 2	-	-	-	-	-	-

Approach	EB	WB	SB
HCM Control Delay, s	0	0	18
HCM LOS			C

Minor Lane/Major Mvmt	EBT	WBT	WBR	SBLn1
Capacity (veh/h)	-	-	-	282
HCM Lane V/C Ratio	-	-	-	0.019
HCM Control Delay (s)	-	-	-	18
HCM Lane LOS	-	-	-	C
HCM 95th %tile Q(veh)	-	-	-	0.1

Intersection	
Int Delay, s/veh	0

Movement	EBL	EBT	WBT	WBR	SBL	SBR
Lane Configurations						
Traffic Vol, veh/h	2	1445	1485	5	0	0
Future Vol, veh/h	2	1445	1485	5	0	0
Conflicting Peds, #/hr	0	0	0	0	0	0
Sign Control	Free	Free	Free	Free	Stop	Stop
RT Channelized	-	None	-	None	-	None
Storage Length	75	-	-	-	-	0
Veh in Median Storage, #	-	0	0	-	0	-
Grade, %	-	0	0	-	0	-
Peak Hour Factor	92	92	92	92	92	92
Heavy Vehicles, %	0	0	0	0	0	0
Mvmt Flow	2	1571	1614	5	0	0

Major/Minor	Major1		Major2		Minor2	
Conflicting Flow All	1619	0	-	0	-	810
Stage 1	-	-	-	-	-	-
Stage 2	-	-	-	-	-	-
Critical Hdwy	5.3	-	-	-	-	7.1
Critical Hdwy Stg 1	-	-	-	-	-	-
Critical Hdwy Stg 2	-	-	-	-	-	-
Follow-up Hdwy	3.1	-	-	-	-	3.9
Pot Cap-1 Maneuver	199	-	-	-	0	281
Stage 1	-	-	-	-	0	-
Stage 2	-	-	-	-	0	-
Platoon blocked, %		-	-	-		
Mov Cap-1 Maneuver	199	-	-	-	-	281
Mov Cap-2 Maneuver	-	-	-	-	-	-
Stage 1	-	-	-	-	-	-
Stage 2	-	-	-	-	-	-

Approach	EB	WB	SB
HCM Control Delay, s	0	0	0
HCM LOS			A

Minor Lane/Major Mvmt	EBL	EBT	WBT	WBR	SBLn1
Capacity (veh/h)	199	-	-	-	-
HCM Lane V/C Ratio	0.011	-	-	-	-
HCM Control Delay (s)	23.3	-	-	-	0
HCM Lane LOS	C	-	-	-	A
HCM 95th %tile Q(veh)	0	-	-	-	-

translutions
the transportation solutions company...

INTERSECTION: 3
INTERSECTION NAME: Los Coyotes Diagonal/Carson Street
NORTH/SOUTH: Los Coyotes Diagonal
EAST/WEST: Carson Street

Turn Mvmt.	# of Lanes	Right Turn Cond.	Lanegroup Capacity	Existing Conditions AM Peak Hour Vol.	AM Peak Hour V/C	PM Peak Hour Vol.	PM Peak Hour V/C
NBL	1.0		1,600	252	0.16	303	0.19
NBT	1.0		1,600	103	0.06	201	0.13
NBR	1.0	P	1,600	352	0.00	535	0.04
SBL	1.0		1,600	67	0.04	87	0.05
SBT	2.0		3,200	207	0.06	123	0.04
SBR	1.0	P	1,600	23	0.00	31	0.00
EBL	1.0		1,600	8	0.01	33	0.02
EBT	3.0		4,800	469	0.16	988	0.25
EBR	0.0	P	0	316	0.00	202	0.00
WBL	2.0		2,880	490	0.17	414	0.14
WBT	2.0		3,200	1,078	0.35	957	0.33
WBR	0.0	P	0	41	0.00	108	0.00
N/S Critical Movements					0.22		0.23
E/W Critical Movements					0.36		0.39
Right Turn Critical Movement					0.00		0.04
Clearance Interval					0.10		0.10
ICU					0.68		0.76
Level of Service (LOS)					B		C

Notes: ICU - Intersection Capacity Utilization
V/C - Volume to Capacity Ratio
Right Turn Conditions:
F - Free Right Turn
O - Overlap Phase
P - Permitted Right Turn
N - No Right Turn on Red

translutions
the transportation solutions company...

INTERSECTION: 3
INTERSECTION NAME: Los Coyotes Diagonal/Carson Street
NORTH/SOUTH: Los Coyotes Diagonal
EAST/WEST: Carson Street

Turn Mvmt.	# of Lanes	Right Turn Cond.	Lanegroup Capacity	Existing With Project onditions AM Peak Hour Vol.	AM Peak Hour V/C	PM Peak Hour Vol.	PM Peak Hour V/C
NBL	1.0		1,600	253	0.16	305	0.19
NBT	1.0		1,600	103	0.06	201	0.13
NBR	1.0	P	1,600	352	0.00	535	0.04
SBL	1.0		1,600	67	0.04	87	0.05
SBT	2.0		3,200	207	0.06	123	0.04
SBR	1.0	P	1,600	24	0.00	33	0.00
EBL	1.0		1,600	9	0.01	34	0.02
EBT	3.0		4,800	470	0.16	989	0.25
EBR	0.0	P	0	317	0.00	203	0.00
WBL	2.0		2,880	490	0.17	414	0.14
WBT	2.0		3,200	1,080	0.35	959	0.33
WBR	0.0	P	0	41	0.00	108	0.00
N/S Critical Movements					0.22		0.23
E/W Critical Movements					0.36		0.39
Right Turn Critical Movement					0.00		0.04
Clearance Interval					0.10		0.10
ICU					0.68		0.76
Level of Service (LOS)					B		C

Notes: ICU - Intersection Capacity Utilization
V/C - Volume to Capacity Ratio
Right Turn Conditions:
F - Free Right Turn
O - Overlap Phase
P - Permitted Right Turn
N - No Right Turn on Red

translutions
the transportation solutions company...

INTERSECTION: 3
INTERSECTION NAME: Los Coyotes Diagonal/Carson Street
NORTH/SOUTH: Los Coyotes Diagonal
EAST/WEST: Carson Street

Turn Mvmt.	# of Lanes	Right Turn Cond.	Lanegroup Capacity	Opening Year (2018) Without Project Conditions			
				AM Peak Hour		PM Peak Hour	
				Vol.	V/C	Vol.	V/C
NBL	1.0		1,600	264	0.17	310	0.19
NBT	1.0		1,600	104	0.07	203	0.13
NBR	1.0	P	1,600	356	0.00	540	0.03
SBL	1.0		1,600	68	0.04	89	0.06
SBT	2.0		3,200	209	0.07	124	0.04
SBR	1.0	P	1,600	32	0.00	36	0.00
EBL	1.0		1,600	32	0.02	42	0.03
EBT	3.0		4,800	671	0.21	1,191	0.29
EBR	0.0	P	0	330	0.00	208	0.00
WBL	2.0		2,880	495	0.17	418	0.15
WBT	2.0		3,200	1,242	0.40	1,134	0.39
WBR	0.0	P	0	42	0.00	109	0.00
N/S Critical Movements					0.24		0.23
E/W Critical Movements					0.42		0.44
Right Turn Critical Movement					0.00		0.03
Clearance Interval					0.10		0.10
ICU					0.76		0.80
Level of Service (LOS)					C		C

Notes: ICU - Intersection Capacity Utilization
V/C - Volume to Capacity Ratio
Right Turn Conditions:
F - Free Right Turn
O - Overlap Phase
P - Permitted Right Turn
N - No Right Turn on Red

translutions
the transportation solutions company...

INTERSECTION: 3
INTERSECTION NAME: Los Coyotes Diagonal/Carson Street
NORTH/SOUTH: Los Coyotes Diagonal
EAST/WEST: Carson Street

Turn Mvmt.	# of Lanes	Right Turn Cond.	Lanegroup Capacity	Opening Year (2018) With Project Conditions			
				AM Peak Hour		PM Peak Hour	
				Vol.	V/C	Vol.	V/C
NBL	1.0		1,600	265	0.17	312	0.20
NBT	1.0		1,600	104	0.07	203	0.13
NBR	1.0	P	1,600	356	0.00	540	0.03
SBL	1.0		1,600	68	0.04	89	0.06
SBT	2.0		3,200	209	0.07	124	0.04
SBR	1.0	P	1,600	33	0.00	38	0.00
EBL	1.0		1,600	33	0.02	43	0.03
EBT	3.0		4,800	672	0.21	1,192	0.29
EBR	0.0	P	0	331	0.00	209	0.00
WBL	2.0		2,880	495	0.17	418	0.15
WBT	2.0		3,200	1,244	0.40	1,136	0.39
WBR	0.0	P	0	42	0.00	109	0.00
N/S Critical Movements					0.24		0.24
E/W Critical Movements					0.42		0.44
Right Turn Critical Movement					0.00		0.03
Clearance Interval					0.10		0.10
ICU					0.76		0.81
Level of Service (LOS)					C		D

Notes: ICU - Intersection Capacity Utilization
V/C - Volume to Capacity Ratio
Right Turn Conditions:
F - Free Right Turn
O - Overlap Phase
P - Permitted Right Turn
N - No Right Turn on Red

translutions, inc.
17632 Irvine Boulevard, Suite 200,
Tustin, California 92780
Phone (949)656-3131 Fax (949)445-3131
solutions@translutions.com

June 28, 2017

Eliza Laws - Senior Environmental Analyst
Albert A. Webb Associates
3788 McCray Street,
Riverside, California 92506

Subject: Lakewood Car Wash – Internal Circulation Analysis

Dear Eliza:

Translutions, Inc. (Translutions) is pleased to provide this evaluation of onsite circulation and queuing for the proposed Lakewood Car Wash project. A concern was raised regarding available queuing for the combined facility. This evaluation has been conducted separately for the car wash part of the facility and the auto care facility, and then combined to evaluate the total queuing of the facility.

The 94th percentile queue for the car wash facility is anticipated to be 4 vehicles in the weekend peak hour (Table A). This includes one car being washed and dried. In the attached markup of the site plan (Figure 1), approximately six vehicles can wait in line before entering the car wash building (Markup A). This does not include the three vehicles that can wait in the second aisle (Markup B). Based on this evaluation, it is unlikely that car wash patrons would spill over to the main drive aisle (Markup C). In addition, if a car wash patron wants to wipe clean their windows for residual droplets of water, they can make a left turn to area D of the markup and exit through the main driveway.

The site plan provides 27 parking spaces. At any given time, 5 vehicles can be serviced in the service bay. Therefore, the total vehicles that can be "parked" – either in the parking bays or the service bays is 32. In addition, the area available for circulating vehicles for the auto care portion of the project in the main inbound drive aisle (Markup C) is approximately 220 feet. Assuming a vehicle lane of 22 feet, an additional approximately 10 vehicles can circulate or wait in the drive aisles.

Assuming an average service time of 30 minutes per car, and assuming 60% of the arriving vehicles arrive in the peak 30 minutes, the number of vehicles arriving in the peak 30 minutes is anticipated to be approximately 28 vehicles (60% of the peak hour inbound trips for the auto car facility). Since there are 27 parking spaces, and if all the service bays are in use, one vehicle will be in the circulating area. The probability of vehicles spilling over to the streets or the alley is therefore minimal.

Please note that this evaluation assumes all inbound trips are customer trips. In reality, some people are likely to come in, drop off their car, and leave – and then come back, pick up their car, and leave again. This scenario translates to 4 trips instead of two. Another example is that someone comes in, finds out the wait time is too high, or checks pricing on something, and leaves, generating two trips without any actual service being done. The trip generation also includes employee trips, deliveries (for special order parts which the repair shop doesn't have in stock), and other deliveries (water, supplies, etc.). Therefore, even in the worst-case evaluation, queues are not likely to exceed the available parking, and circulation space provided in the site plan.

CONCLUSION

Based on this evaluation, it is unlikely that vehicle queues will exceed the available onsite circulation and parking area.

We trust you will find this information helpful for your project entitlements. If you have any questions, please do not hesitate to contact us at (949) 656-3131.

Sincerely,

translutions, inc.

Sandipan Bhattacharjee, P.E., AICP
Principal

translutions
the transportation solutions company...

Table A: Queuing Analysis For Car Wash (Weekend Peak Hour)

Trip Generation (Inbound)	22	during p.m. peak hour
Turn Made into Property	22	right turns
Service Rate	40.00	/hour
Arrival Rate	22.00	/hour
Arrival Percent	100.0%	
Capacity	40.00	/hour
p_total	0.5500	

Number of Vehicles in Queue	Probability of Vehicles	Probability of Queue Less or Equal to
0	45.0%	45.00%
1	24.8%	69.75%
2	13.6%	83.36%
3	7.5%	90.85%
4	4.1%	94.97%
5	2.3%	97.23%
6	1.2%	98.48%
7	0.7%	99.16%
8	0.4%	99.54%
9	0.2%	99.75%
10	0.1%	99.86%
11	0.1%	99.92%
12	0.0%	99.96%
13	0.0%	99.98%
14	0.0%	99.99%
15	0.0%	99.99%
16	0.0%	100.00%
17	0.0%	100.00%
18	0.0%	100.00%
19	0.0%	100.00%
20	0.0%	100.00%

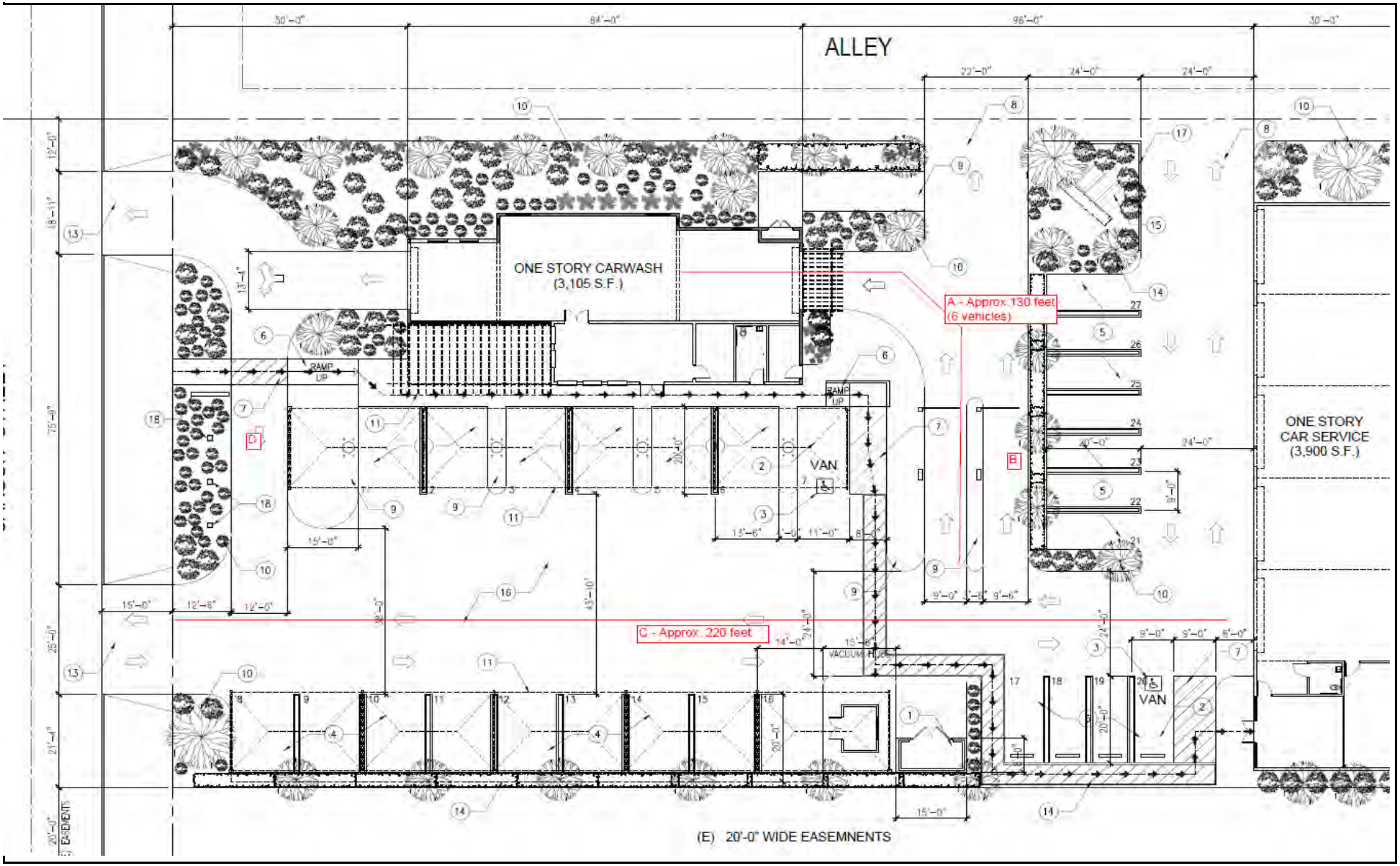

FIGURE 1

Lakewood Car Wash
Site Plan Markup

translutions
the transportation solutions company...

APPENDIX “K”

Exhibits and Plans

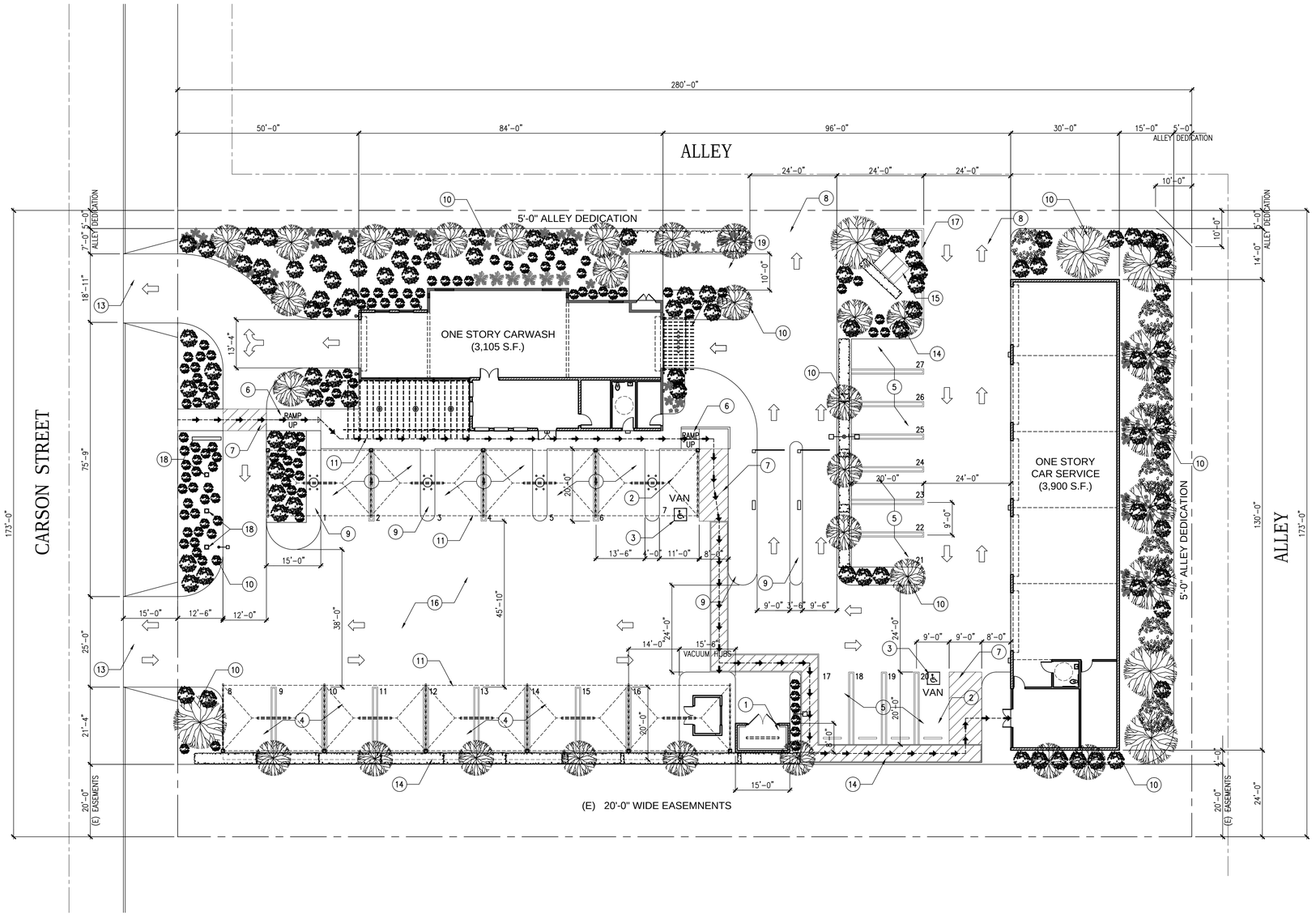

1 A1.0 SITE PLAN

SCALE: 1/16" = 1'-0"

NORTH

SITE PLAN KEY NOTES:

1. NEW TRASH ENCLOSURE
2. NEW ACCESSIBLE PARKING STALL
2a. NEW VAN ACCESSIBLE PARKING STALL
3. NEW ACCESSIBLE SYMBOLS
4. NEW CAR WASH PARKING STALLS
5. NEW PARKING STALLS
6. NEW RAMP
7. NEW STRIPPING
8. NEW DRIVEWAY
9. NEW CONCRETE CURB
10. NEW PLANTING AREA
11. NEW CANOPY ABOVE
12. EXISTING PLANTING AREA
13. EXISTING DRIVEWAY (NO CHANGE)
14. EXISTING PLANTING AREA
15. EXISTING TRANSFORMER
16. EXISTING AC PAVEMENT
17. EXISTING CMU WALL
18. EXISTING SIGN & FLAG POLES TO REMAIN
19. 10'-0" x 25'-0" LOADING AREA

LEGEND:

- PROPERTY LINE
- ADA PATH OF TRAVEL
- DOUBLE HEADED POLE
- CUT OFF WALL PACK
- LINEAR "WATERPROOF" MOUNTED UNDER CANOPY
- FORWARD THROW LIGHT POLE CUT OFF
- PENDANT TYPE "A"
- UP/DOWN SCONCE ON MAIN FACADE

SRK
STEWART ROMBERGER KITE
SRK ARCHITECTS INC.

2254 S. Figueroa St.
Los Angeles, CA 90007
p: 213.747.1199

www.srkarchitectsinc.com

AUTOMATED CAR WASH AND AUTO REPAIR CENTER

6741 CARSON STREET
LAKEWOOD, CA.

© 2017 SRK ARCHITECTS, INC.
ALL DRAWINGS AND WRITTEN MATERIAL HEREIN CONSTITUTE THE ORIGINAL AND UNPUBLISHED WORK OF SRK ARCHITECTS, INC., AND THE SAME MAY NOT BE DUPLICATED, USED, OR DISCLOSED WITHOUT THE WRITTEN CONSENT OF SRK ARCHITECTS, INC.

LICENSED ARCHITECT
BRIAN A. KITE
C-11258
RENEWAL DATE: 08/31/17
STATE OF CALIFORNIA

Issue	Description	Date
	CITY OF LAKEWOOD CUP SUBMITTAL	02/15/17

Drawn: MT Check: BK Owner Approval:

Job No: 16024.00 Scale: AS NOTED

Title: SITE PLAN

Sheet: A1.0

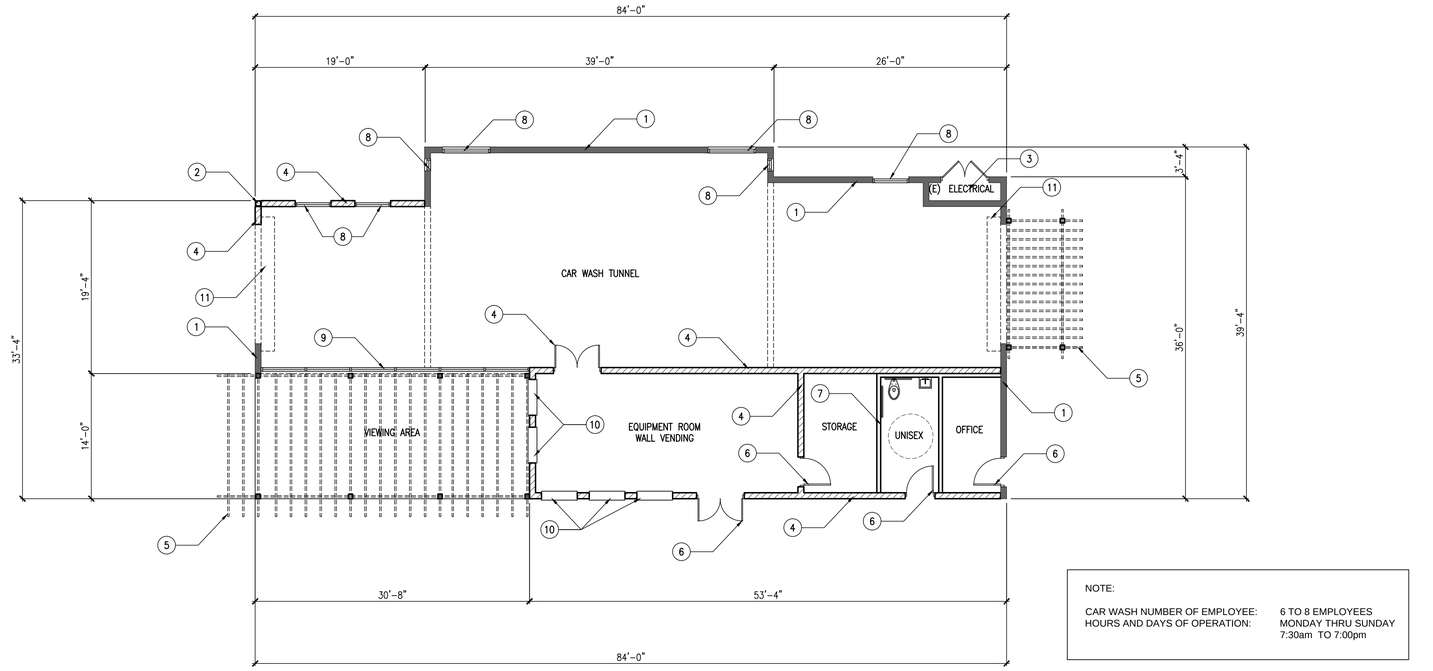

NOTE:

CAR WASH NUMBER OF EMPLOYEE: 6 TO 8 EMPLOYEES
HOURS AND DAYS OF OPERATION: MONDAY THRU SUNDAY
7:30am TO 7:00pm

1 A2.0 FLOOR PLAN - CAR WASH

SCALE: 1/8" = 1'-0"

NORTH

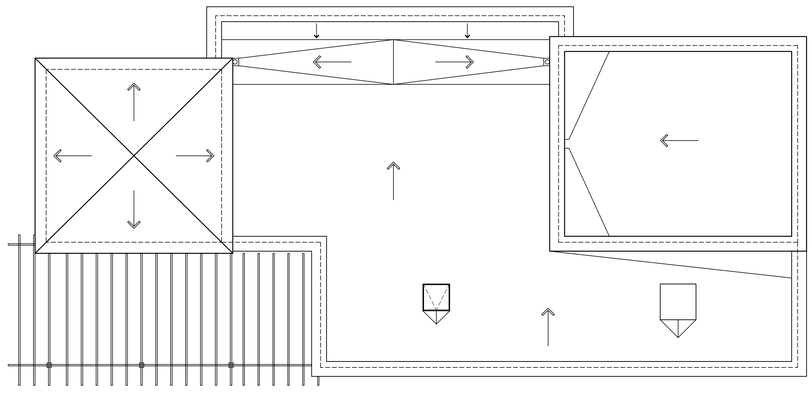

1 A2.0 ROOF PLAN - CAR WASH

SCALE: 1/8" = 1'-0"

NORTH

PLAN KEY NOTES:

1. EXISTING CMU WALL
2. EXISTING COLUMN
3. EXISTING ELECTRICAL ROOM
4. NEW CMU WALL
5. NEW WOOD CANOPY ABOVE
6. NEW DOOR
7. NEW WALL
8. NEW METAL GRID SCREEN
9. NEW WINDOW CLEAR ANODIZED ALUMINUM FRAME WITH LT. TINTED GREEN GLASS
10. NEW OPENING FOR VENDING MACHINE
11. NEW METAL ROLL-UP DOOR

LEGEND:

- EXISTING CMU WALL
- NEW CMU WALL
- NEW WALL

SRK
STEWART
ROMBERGER
KITE
SRK ARCHITECTS INC.

2254 S. Figueroa St.
Los Angeles, CA 90007
p: 213.747.1199

www.srkarchitectsinc.com

AUTOMATED CAR WASH AND AUTO REPAIR CENTER

6741 CARSON STREET
LAKEWOOD, CA.

© 2017 SRK ARCHITECTS, INC.
ALL DRAWINGS AND WRITTEN MATERIAL HEREIN CONSTITUTE THE ORIGINAL AND UNPUBLISHED WORK OF SRK ARCHITECTS, INC., AND THE SAME MAY NOT BE DUPLICATED, USED, OR DISCLOSED WITHOUT THE WRITTEN CONSENT OF SRK ARCHITECTS, INC.

LICENSED ARCHITECT
BRIAN A. KITE
C-11258
RENEWAL DATE: 08/31/17
STATE OF CALIFORNIA

Issue	Description	Date
	CITY OF LAKEWOOD CUP SUBMITTAL	02/15/17

Drawn: MT Check: BK Owner Approval:

Job No: 16024.00 Scale: AS NOTED

Title: FLOOR PLAN
ROOF PLAN
CAR WASH

Sheet: A2.0

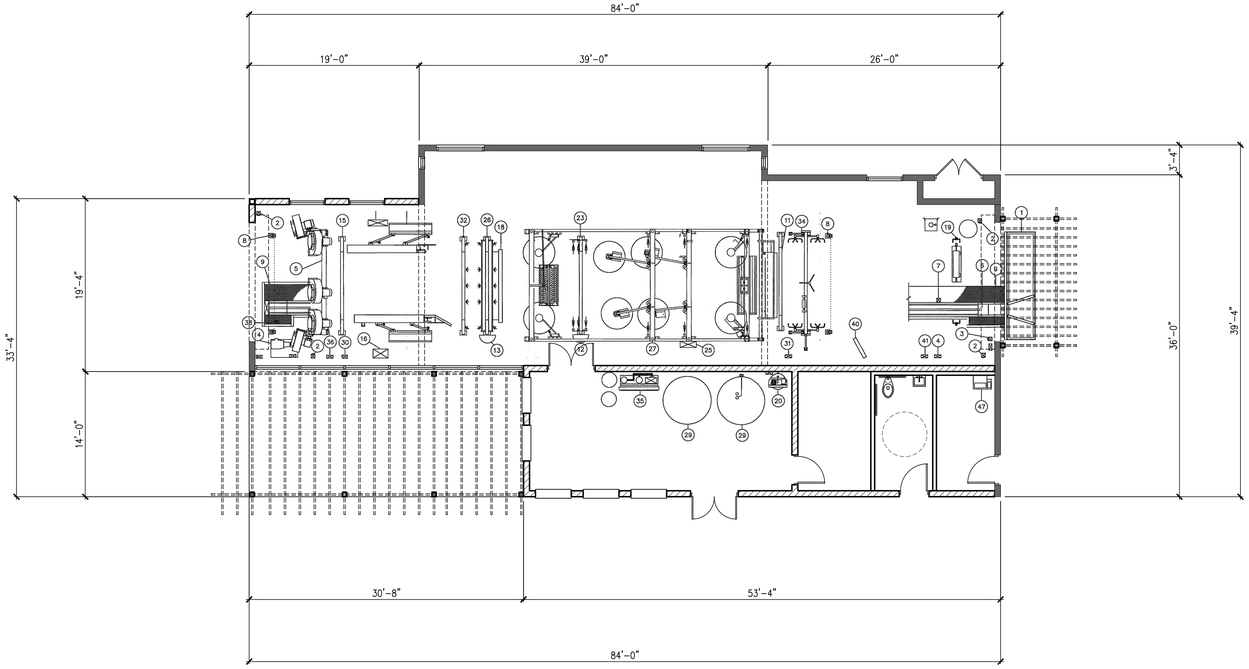

CARWASH EQUIPMENT LIST:

⊛	PART NO.	DESCRIPTION	SUPPLIED BY	⊛	PART NO.	DESCRIPTION	SUPPLIED BY
1	SCD-410	WHEEL CORRELATOR 35" WIDE WITH ENTRANCE ROLLER YOKE	N/S CORPORATION	25	MCC-001	MASTER CONTROL CENTER FOR TUNNEL BRUSH SYSTEM - INCL. BREAKERS/STARTERS	N/S CORPORATION
2		START/STOP BUTTONS FOR CONVEYOR (4 PLACES)	OTHERS	26	ALUM-200	DOUBLE MANIFOLD RINSE WITH DRYING AGENT AND SEALER WAX	N/S CORPORATION
3	R/C	ROLLER CALL-UP AND AIR TRIO FOR CONVEYOR	N/S CORPORATION	27	ECHO-1	TWO PAIR ROCKER PANEL BRUSHES, TWO PAIR WRAP BRUSHES, 2 F/R MITTER	N/S CORPORATION
4		KEYPAD	OTHERS	28	RGLS-01	SINGLE LIGHT ENTRY SYSTEM WITH STAND	N/S CORPORATION
5	AF-50	(5) 10HP TOUCHLESS AIR FORCE DRYING SYSTEM INCLUDING PANEL	N/S CORPORATION	29	940-1285	(2 PLACES) 1500 GALLON R.O. STORAGE TANKS 64" X 121	N/S CORPORATION
6	OUD-200	80' OVER/UNDER HYDR. CONV. & 10HP HYD PWR PAK - REAR WHEEL PUSH - 7"-4" ROLLER SPCNG	N/S CORPORATION	30		NON-FUSED DISCONNECT FOR 10HP POWER PAK	ELEC CONTRACTOR
7		ROLLER CALL UP SWITCH	N/S CORPORATION	31		(2 PLACES) ELECTRIC EYE CONTROL BOX	N/S CORPORATION
8	SYS-90	(2) ELECTRIC EYE ACTIVATION ALUM. SUPPORT (1) FOR WASH ACTIVATION (1) FOR ANTI COLLISION	N/S CORPORATION	32	DIA-100	R.O. ARCH SPOT FREE PVC PLUMBING	N/S CORPORATION
9		CHECKER PLATES	OTHERS	33		WASH VALET TUNNEL CONTROLLER (INCLUDES ALL RELAYS)	OTHERS
10	UCW-090	UNDERCARRIAGE WASH SURFACE MOUNTED	N/S CORPORATION	34	BLST-200A	HIGH PRESSURE BLAST SYSTEM WITH 5 SPINNERS (NO PUMP STATION)	N/S CORPORATION
11		STROBING LIGHTS ENTRY ARCH	N/S CORPORATION	35	ROS-2000	NO SPOT RINSE, 1.0HP PUMP 3 CU. FT. CARBON FILTER, 2HP REPRESS PUMP	N/S CORPORATION
12		FLASHING SIGN TRIPLE FOAM	N/S CORPORATION	36		PULSE SWITCH J-BOX	ELEC CONTRACTOR
13		FLASHING SIGN RAIN X	N/S CORPORATION	37		MAIN POWER DISTRIBUTION CENTER	OTHERS
14	OUD-200	10HP POWER PAK HYDRAULIC	N/S CORPORATION	38		PULSE SWITCH INSIDE CONVEYOR PIT	N/S CORPORATION
15	TGA-ARCH	CROSS OVER ARCH FOR TIRE GLOSS SYSTEM	N/S CORPORATION	39	RC-2000	RECLAIM SYSTEM 20HP PUMP	N/S CORPORATION
16	ECS-050	FREE STANDING AIR DRYER CONTROL PANEL	N/S CORPORATION	40	INST-2946	INSTRUCTIONAL SIGN 29" X 46" 110VAC	N/S CORPORATION
17	TGA-200	TIRE GLOSS APPLICATOR - AIR PANEL FLASHING SIGN, CONVEX MIRROR	N/S CORPORATION	41	MENU-36NH	MENU SIGN	N/S CORPORATION
18	RAIN-100	RAIN ARCH - FINAL RINSE (ATTACH TO ALUM-100)	N/S CORPORATION	42		POWER DISTRIBUTION PANEL (PDP - ICS)	OTHERS
19	CTA-200	CHEMICAL TIRE APPLICATOR - TREADLE HOSE ACTIVATION, (2) STANDS, HYDROMINDER BUCKET	N/S CORPORATION	43	VAC	SELF-SERVICE VACUUM WITH DOUBLE OUTLET, TOOL KIT, AND COIN MECHANISM	N/S CORPORATION
20	HP-10	10HP COMPRESSOR 120 GALLON VERTICAL TANK 3 PHASE	N/S CORPORATION	44		COMM BOX (TUNNEL MASTER) 110VAC	OTHERS
21	HSP-DOSA	DOSATRON CHEMICAL BOARD W/ SOLENOID SUPPLY MANIFOLD - 8 FUNCTION	N/S CORPORATION	45		LOW VOLTAGE CONDUIT JUNCTION BOX	OTHERS
22				46		4 PORT 100 BASE-T WALL PLATE NEAR SERVER COMPUTER	OTHERS
23	ALUM-300	TRIPLE COLOR RAINBOW WAX	N/S CORPORATION	47		TUNNEL KEYBOARD AND INPUT TERMINAL	OTHERS
24		24V, 750VA COMPUTER TRANSFORMER FOR TUNNEL CONTROLLER	ELECT CONTRACTOR	48		TUNNEL RELAY BOX	OTHERS

1 / A2.0a EQUIPMENT LAYOUT - CAR WASH

SCALE: 1/8" = 1'-0"

NORTH

LEGEND:

- EXISTING CMU WALL
- NEW CMU WALL
- NEW WALL

SRK
STEWART ROMBERGER KITE
SRK ARCHITECTS INC.

2254 S. Figueroa St.
Los Angeles, CA 90007
p: 213.747.1199

www.srkarchitectsinc.com

AUTOMATED CAR WASH AND AUTO REPAIR CENTER

6741 CARSON STREET
LAKEWOOD, CA.

© 2017 SRK ARCHITECTS, INC.
ALL DRAWINGS AND WRITTEN MATERIAL HEREIN CONSTITUTE THE ORIGINAL AND UNPUBLISHED WORK OF SRK ARCHITECTS, INC., AND THE SAME MAY NOT BE DUPLICATED, USED, OR DISCLOSED WITHOUT THE WRITTEN CONSENT OF SRK ARCHITECTS, INC.

LICENSED ARCHITECT
BRIAN A. KITE
C-11258
RENEWAL DATE: 08/31/17
STATE OF CALIFORNIA

Issue	Description	Date
	CITY OF LAKEWOOD CUP SUBMITTAL	02/15/17

Drawn: MT Check: BK Owner Approval:

Job No: 16024.00 Scale: AS NOTED

Title: EQUIPMENT LAYOUT CAR WASH

Sheet: A2.0a

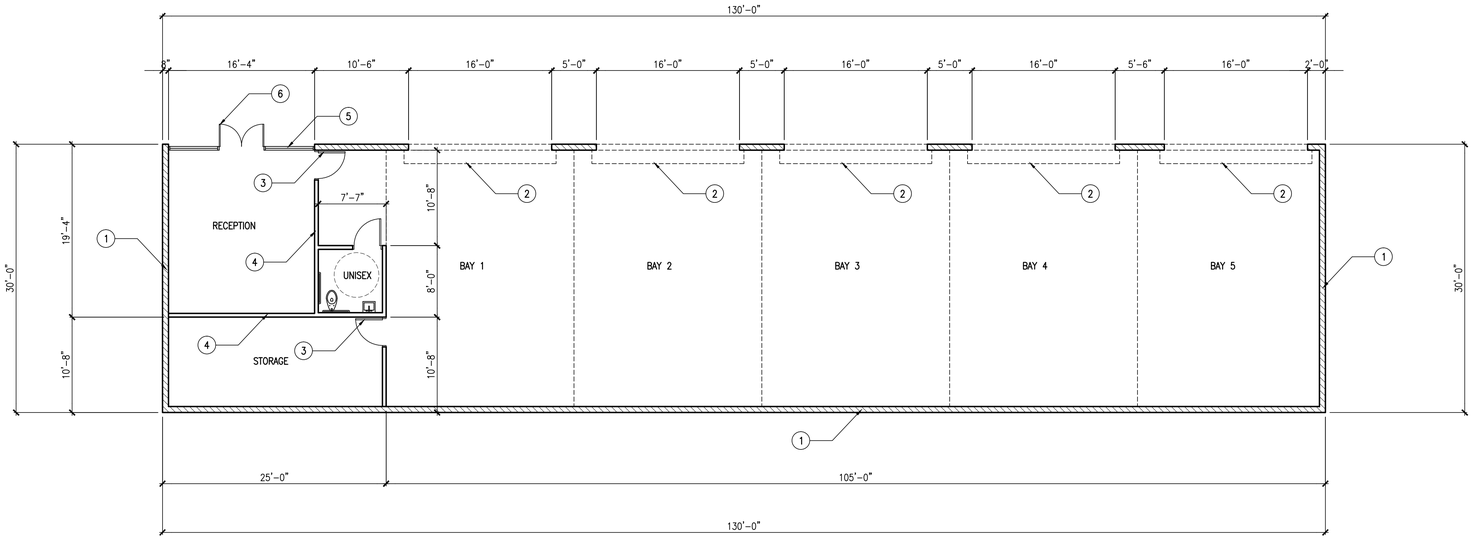

NOTE:

TYPE OF SERVICE:	MECHANIC SHOP
HOURS AND DAYS OF OPERATION:	MONDAY THRU SUNDAY 7:30am TO 7:00pm

1 A3.0 FLOOR PLAN - CAR SERVICE

SCALE: 1/8" = 1'-0"

NORTH

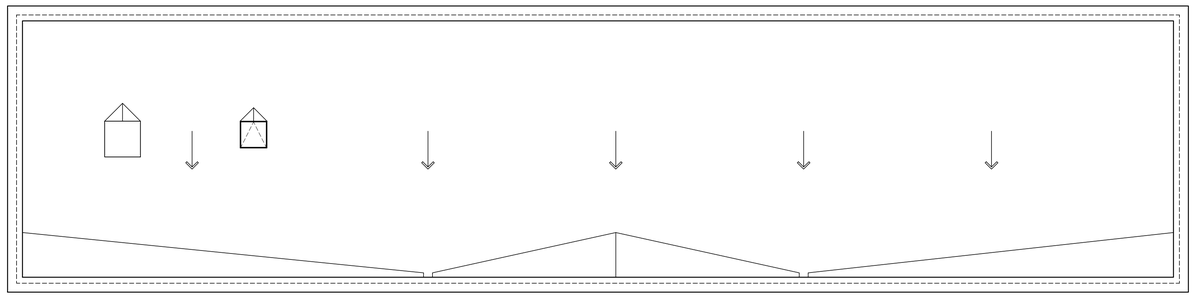

2 A3.0 ROOF PLAN - CAR SERVICE

SCALE: 1/8" = 1'-0"

NORTH

PLAN KEY NOTES:

1. NEW CMU WALL
2. NEW METAL ROLL-UP DOOR
3. NEW DOOR
4. NEW WALL
5. NEW WINDOW CLEAR ANODIZED ALUMINUM FRAME WITH LT. TINTED GREEN GLASS
6. NEW STOREFRONT DOOR
7. NEW METAL ROLL-UP DOOR WITH NOISE DAMPENING

LEGEND:

- NEW CMU WALL
- NEW WALL

SRK
STEWART
ROMBERGER
KITE
SRK ARCHITECTS INC.

2254 S. Figueroa St.
Los Angeles, CA 90007
p: 213.747.1199

www.srkarchitectsinc.com

AUTOMATED CAR WASH AND AUTO REPAIR CENTER

6741 CARSON STREET
LAKEWOOD, CA.

© 2017 SRK ARCHITECTS, INC.
ALL DRAWINGS AND WRITTEN MATERIAL HEREIN CONSTITUTE THE ORIGINAL AND UNPUBLISHED WORK OF SRK ARCHITECTS, INC., AND THE SAME MAY NOT BE DUPLICATED, USED, OR DISCLOSED WITHOUT THE WRITTEN CONSENT OF SRK ARCHITECTS, INC.

LICENSED ARCHITECT
BRIAN A. KITE
C-11258
RENEWAL DATE:
08/31/17
STATE OF CALIFORNIA

Issue	Description	Date
	CITY OF LAKEWOOD CUP SUBMITTAL	02/15/17

Drawn: MT Check: BK Owner Approval:

Job No: 16024.00 Scale: AS NOTED

Title: FLOOR PLAN AND ROOF PLAN CAR SERVICE

Sheet: A3.0

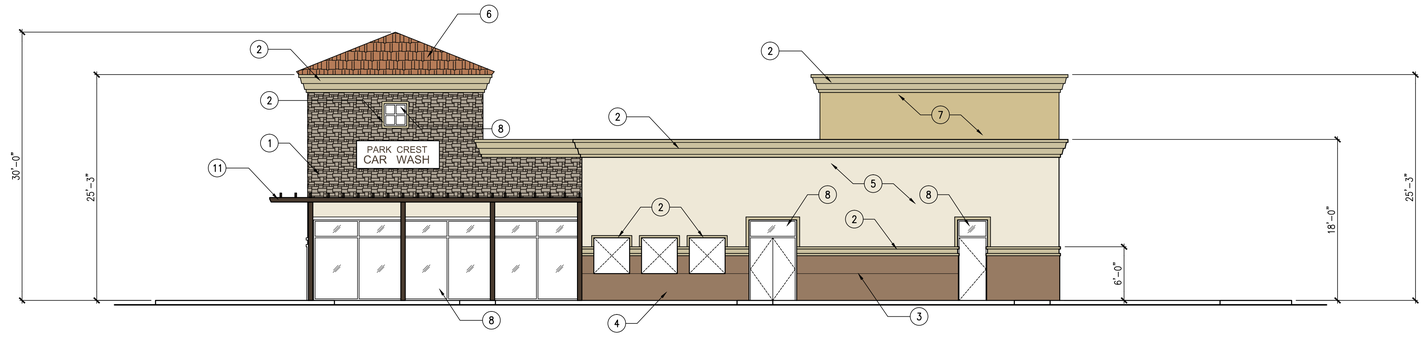

1 A4.0 EAST ELEVATION - CAR WASH

SCALE: 1/8" = 1'-0"

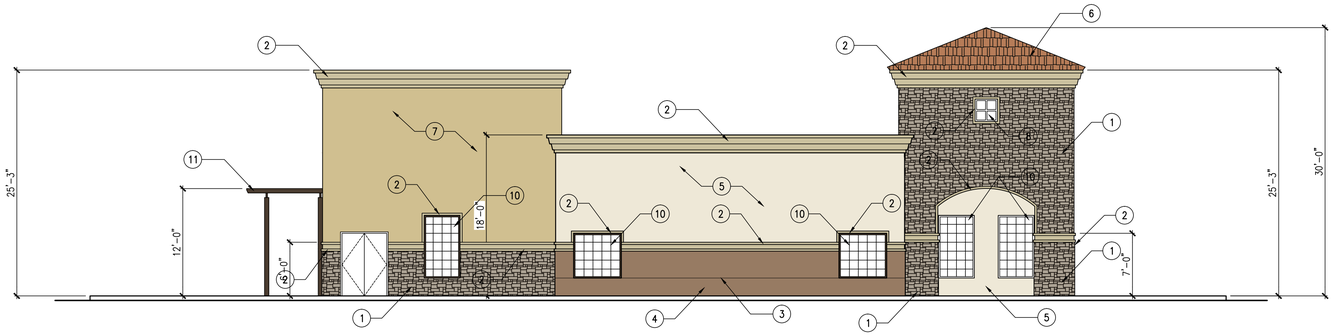

2 A4.0 WEST ELEVATION - CAR WASH

SCALE: 1/8" = 1'-0"

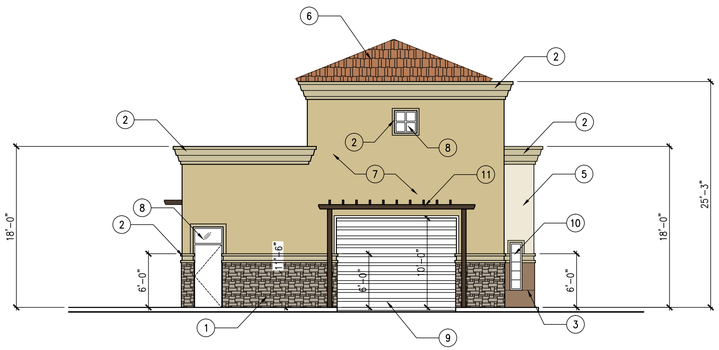

3 A4.0 NORTH ELEVATION - CAR WASH

SCALE: 1/8" = 1'-0"

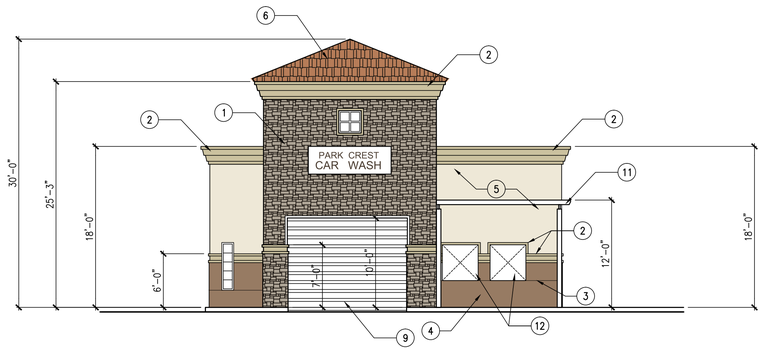

4 A4.0 SOUTH ELEVATION - CAR WASH

SCALE: 1/8" = 1'-0"

KEY NOTES:

1. STONE VENEER BY CORONADO STONE, VIRGINIA LEDGE HILLSIDE
2. FOAM MOULDING, WITH STUCCO COLOR COAT FINISH DUNN EDWARDS, DE 6200 HAND WOVEN
3. "FRY" REVEAL COLOR TO MATCH ADJACENT WALL
4. LA HABRA STUCCO, DUNN EDWARDS, DE 6118, SANDPIT
5. LA HABRA STUCCO, X-82 HACIENDA
6. EAGLE CONCRETE ROOF TILE, 8LBS. PER SQ. FT., S-TYPE CAPISTRANO #3684, ER-6034
7. LA-HABRA STUCCO, PAINT DUNN EDWARDS, DE 6165, TOASTED MARSHMALLOW
8. WINDOW IN CLEAR ANODIZED ALUMINUM FRAME WITH LT. TINTED GREEN GLASS
9. METAL ROLL-UP DOOR, COLOR TO MATCH ADJACENT WALL
10. PAINTED METAL GRID SCREEN, DUNN EDWARDS, DE 6200, HAND WOVEN
11. WOOD CANOPY
12. OPENING FOR VENDING MACHINE

SRK
STEWART
ROMBERGER
KITE
SRK ARCHITECTS INC.

2254 S. Figueroa St.
Los Angeles, CA 90007
p: 213.747.1199

www.srkarchitectsinc.com

AUTOMATED CAR WASH AND AUTO REPAIR CENTER

6741 CARSON STREET
LAKEWOOD, CA.

© 2017 SRK ARCHITECTS, INC.
ALL DRAWINGS AND WRITTEN MATERIAL HEREIN CONSTITUTE THE ORIGINAL AND UNPUBLISHED WORK OF SRK ARCHITECTS, INC., AND THE SAME MAY NOT BE DUPLICATED, USED, OR DISCLOSED WITHOUT THE WRITTEN CONSENT OF SRK ARCHITECTS, INC.

LICENSED ARCHITECT
BRIAN A. KITE
C-11258
RENEWAL DATE: 08/31/17
STATE OF CALIFORNIA

Issue	Description	Date
	CITY OF LAKEWOOD CUP SUBMITTAL	02/15/17

Drawn: MT Check: BK Owner Approval:

Job No: 16024.00 Scale: AS NOTED

Title: ELEVATIONS CAR WASH

Sheet: A4.0

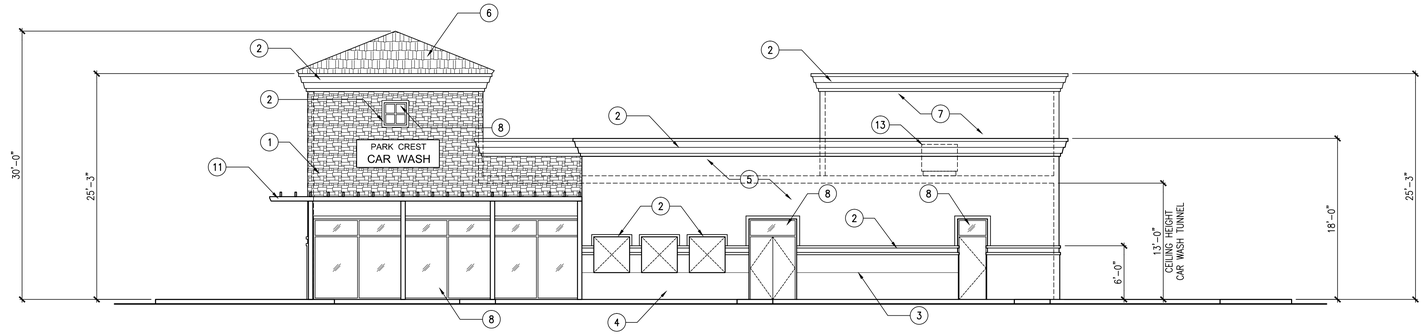

1 A4.0 EAST ELEVATION - CAR WASH

SCALE: 1/8" = 1'-0"

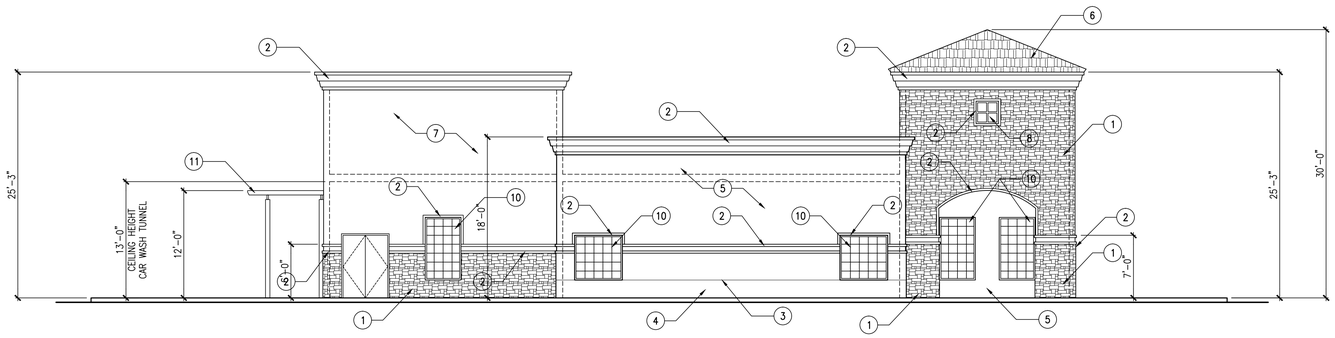

2 A4.0 WEST ELEVATION - CAR WASH

SCALE: 1/8" = 1'-0"

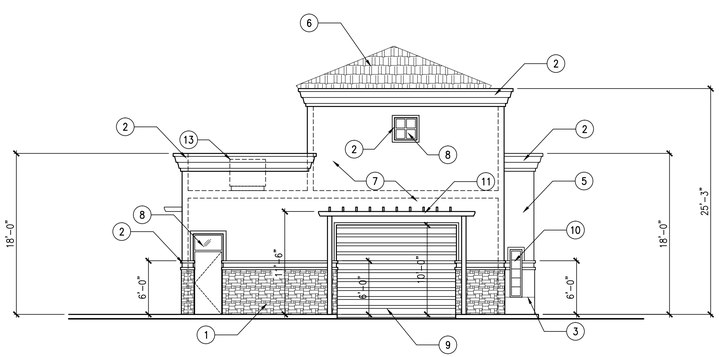

3 A4.0 NORTH ELEVATION - CAR WASH

SCALE: 1/8" = 1'-0"

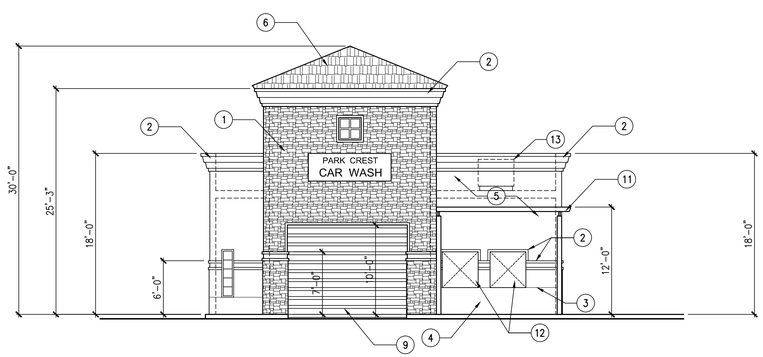

4 A4.0 SOUTH ELEVATION - CAR WASH

SCALE: 1/8" = 1'-0"

KEY NOTES:

1. STONE VENEER BY CORONADO STONE, VIRGINIA LEDGE HILLSIDE
2. FOAM MOULDING, WITH STUCCO COLOR COAT FINISH DUNN EDWARDS, DE 6200 HAND WOVEN
3. "FRY" REVEAL COLOR TO MATCH ADJACENT WALL
4. LA HABRA STUCCO, DUNN EDWARDS, DE 6118, SANDPIT
5. LA HABRA STUCCO, X-82 HACIENDA
6. EAGLE CONCRETE ROOF TILE, 8LBS. PER SQ. FT., S-TYPE CAPISTRANO #3684, ER-6034
7. LA-HABRA STUCCO, PAINT DUNN EDWARDS, DE 6165, TOASTED MARSHMALLOW
8. WINDOW IN CLEAR ANODIZED ALUMINUM FRAME WITH LT. TINTED GREEN GLASS
9. METAL ROLL-UP DOOR, COLOR TO MATCH ADJACENT WALL
10. PAINTED METAL GRID SCREEN, DUNN EDWARDS, DE 6200, HAND WOVEN
11. WOOD CANOPY
12. OPENING FOR VENDING MACHINE
13. MECHANICAL UNIT AT ROOF

SRK
STEWART
ROMBERGER
KITE
SRK ARCHITECTS INC.

2254 S. Figueroa St.
Los Angeles, CA 90007
p: 213.747.1199

www.srkarchitectsinc.com

AUTOMATED CAR WASH AND AUTO REPAIR CENTER

6741 CARSON STREET
LAKEWOOD, CA.

© 2017 SRK ARCHITECTS, INC.
ALL DRAWINGS AND WRITTEN MATERIAL HEREIN CONSTITUTE THE ORIGINAL AND UNPUBLISHED WORK OF SRK ARCHITECTS, INC., AND THE SAME MAY NOT BE DUPLICATED, USED, OR DISCLOSED WITHOUT THE WRITTEN CONSENT OF SRK ARCHITECTS, INC.

LICENSED ARCHITECT
BRIAN A. KITE
C-11258
RENEWAL DATE:
08/31/17
STATE OF CALIFORNIA

Issue	Description	Date
	CITY OF LAKEWOOD CUP SUBMITTAL	02/15/17

Drawn: MT Check: BK Owner Approval:

Job No: 16024.00 Scale: AS NOTED

Title: ELEVATIONS
CAR WASH

Sheet: A4.0

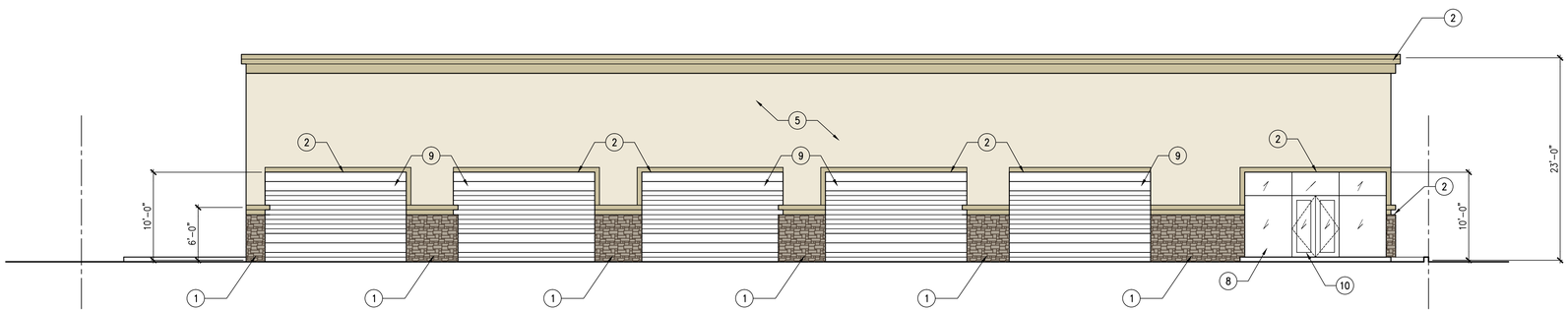

1 / A5.0 SOUTH ELEVATION - CAR SERVICE

SCALE: 1/8" = 1'-0"

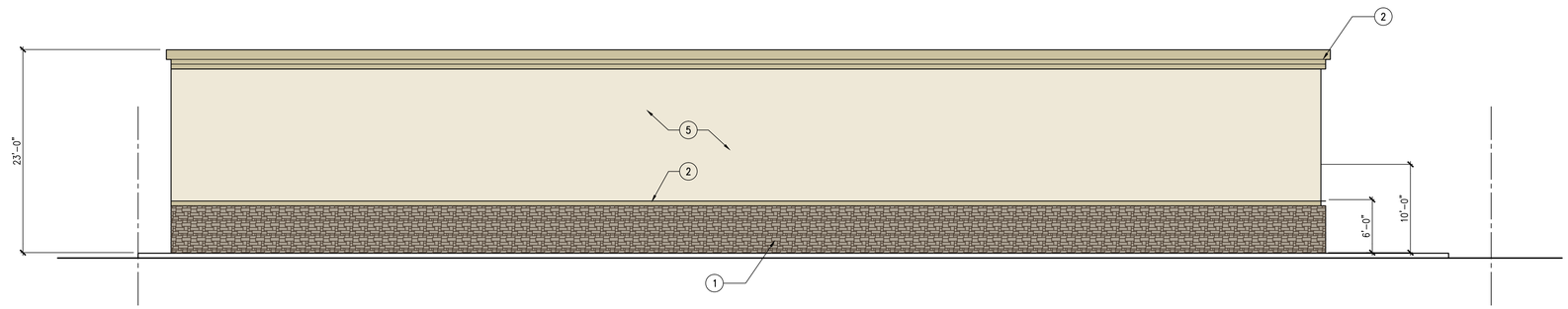

2 / A5.0 NORTH ELEVATION - CAR SERVICE

SCALE: 1/8" = 1'-0"

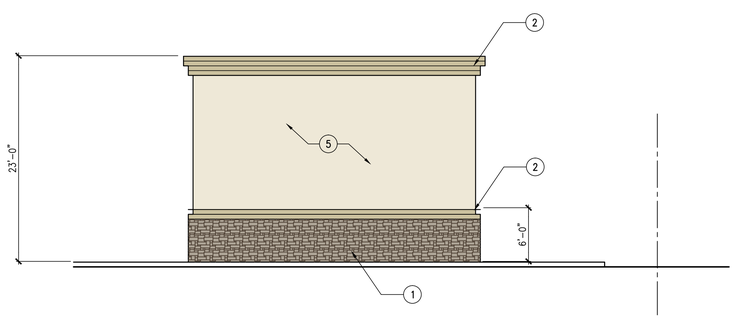

3 / A5.0 EAST ELEVATION - SERVICE

SCALE: 1/8" = 1'-0"

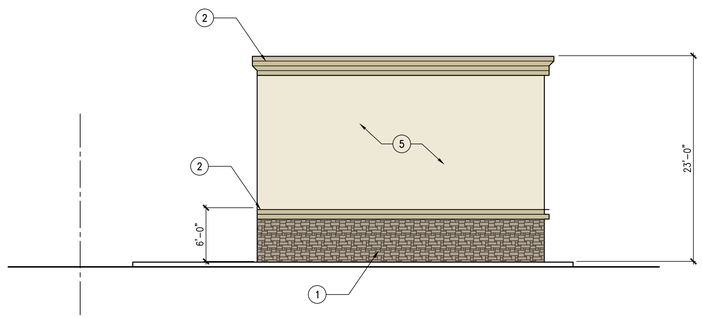

4 / A5.0 WEST ELEVATION - CAR SERVICE

SCALE: 1/8" = 1'-0"

KEY NOTES:

1. STONE VENEER BY CORONADO STONE, VIRGINIA LEDGE HILLSIDE
2. FOAM MOULDING, WITH STUCCO COLOR COAT FINISH DUNN EDWARDS, DE 6200 HAND WOVEN
3. "FRY" REVEAL COLOR TO MATCH ADJACENT WALL
4. LA HABRA STUCCO, DUNN EDWARDS, DE 6118, SANDPIT
5. LA HABRA STUCCO, X-82 HACIENDA
6. EAGLE CONCRETE ROOF TILE, 8LBS. PER SQ. FT., S-TYPE CAPISTRANO #3684, ER-6034
7. LA-HABRA STUCCO, PAINT DUNN EDWARDS, DE 6165, TOASTED MARSHMALLOW
8. WINDOW IN CLEAR ANODIZED ALUMINUM FRAME WITH LT. TINTED GREEN GLASS
9. METAL ROLL-UP DOOR, COLOR TO MATCH ADJACENT WALL
10. 6'-0" x 7'-0" STOREFRONT DOOR

SRK
STEWART
ROMBERGER
KITE
SRK ARCHITECTS INC.

2254 S. Figueroa St.
Los Angeles, CA 90007
p: 213.747.1199

www.srkarchitectsinc.com

AUTOMATED CAR WASH AND AUTO REPAIR CENTER

6741 CARSON STREET
LAKEWOOD, CA.

© 2017 SRK ARCHITECTS, INC.
ALL DRAWINGS AND WRITTEN MATERIAL HEREIN CONSTITUTE THE ORIGINAL AND UNPUBLISHED WORK OF SRK ARCHITECTS, INC., AND THE SAME MAY NOT BE DUPLICATED, USED, OR DISCLOSED WITHOUT THE WRITTEN CONSENT OF SRK ARCHITECTS, INC.

LICENSED ARCHITECT
BRIAN A. KITE
C-11258
RENEWAL DATE: 08/31/17
STATE OF CALIFORNIA

Issue	Description	Date
	CITY OF LAKEWOOD CUP SUBMITTAL	02/15/17

Drawn: MT Check: BK Owner Approval:

Job No: 16024.00 Scale: AS NOTED

Title: ELEVATIONS CAR SERVICE

Sheet: A5.0

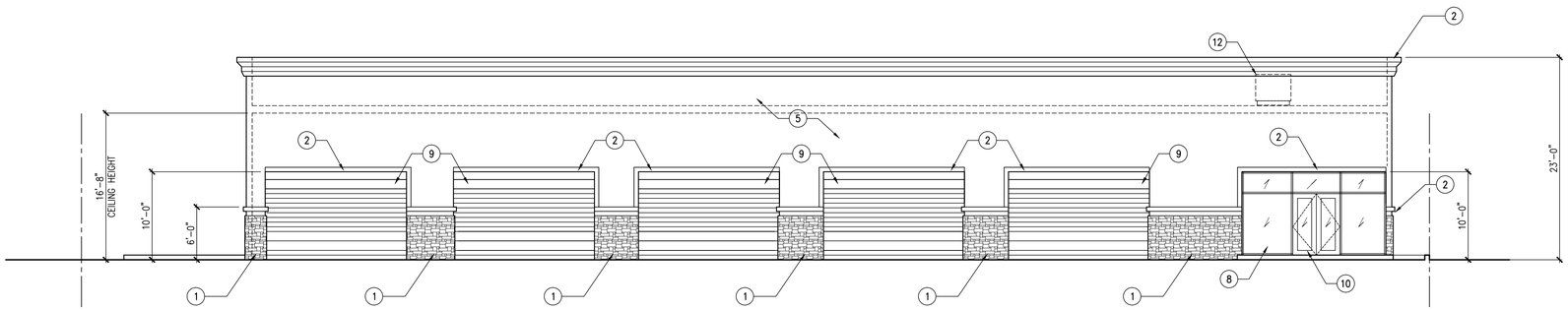

1 A5.0 SOUTH ELEVATION - CAR SERVICE

SCALE: 1/8" = 1'-0"

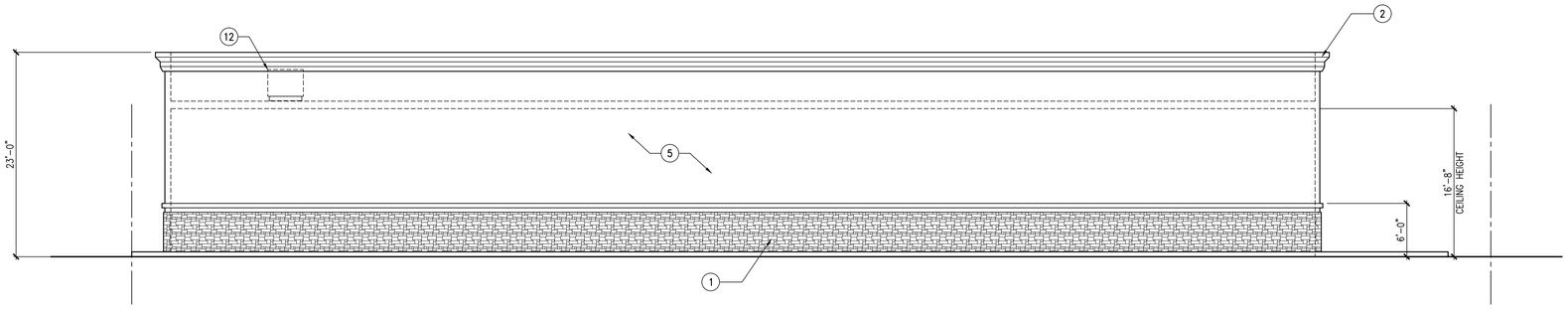

2 A5.0 NORTH ELEVATION - CAR SERVICE

SCALE: 1/8" = 1'-0"

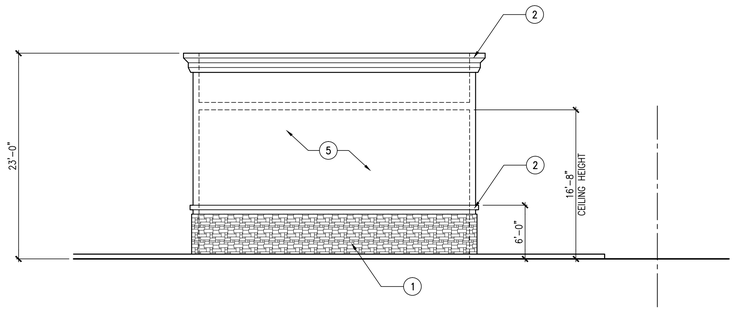

3 A5.0 EAST ELEVATION - SERVICE

SCALE: 1/8" = 1'-0"

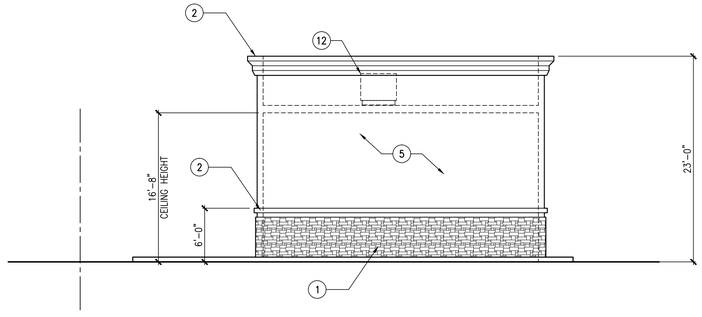

4 A5.0 WEST ELEVATION - CAR SERVICE

SCALE: 1/8" = 1'-0"

KEY NOTES:

1. STONE VENEER BY CORONADO STONE, VIRGINIA LEDGE HILLSIDE
2. FOAM MOULDING, WITH STUCCO COLOR COAT FINISH DUNN EDWARDS, DE 6200 HAND WOVEN
3. "FRY" REVEAL COLOR TO MATCH ADJACENT WALL
4. LA HABRA STUCCO, DUNN EDWARDS, DE 6118, SANDPIT
5. LA HABRA STUCCO, X-82 HACIENDA
6. EAGLE CONCRETE ROOF TILE, 8LBS. PER SQ. FT., S-TYPE CAPISTRANO #3684, ER-6034
7. LA-HABRA STUCCO, PAINT DUNN EDWARDS, DE 6165, TOASTED MARSHMALLOW
8. WINDOW IN CLEAR ANODIZED ALUMINUM FRAME WITH LT. TINTED GREEN GLASS
9. METAL ROLL-UP DOOR, COLOR TO MATCH ADJACENT WALL
10. 6'-0" x 7'-0" STOREFRONT DOOR
11. METAL ROLL-UP DOOR WITH NOISE DAMPENING. COLOR TO MATCH ADJACENT WALL
12. MECHANICAL UNIT AT ROOF

SRK
STEWART
ROMBERGER
KITE
SRK ARCHITECTS INC.

2254 S. Figueroa St.
Los Angeles, CA 90007
p: 213.747.1199

www.srkarchitectsinc.com

AUTOMATED CAR WASH AND AUTO REPAIR CENTER

6741 CARSON STREET
LAKEWOOD, CA.

© 2017 SRK ARCHITECTS, INC.
ALL DRAWINGS AND WRITTEN MATERIAL HEREIN CONSTITUTE THE ORIGINAL AND UNPUBLISHED WORK OF SRK ARCHITECTS, INC., AND THE SAME MAY NOT BE DUPLICATED, USED, OR DISCLOSED WITHOUT THE WRITTEN CONSENT OF SRK ARCHITECTS, INC.

LICENSED ARCHITECT
BRIAN A. KITE
C-11258
RENEWAL DATE:
08/31/17
STATE OF CALIFORNIA

Issue	Description	Date
	CITY OF LAKEWOOD CUP SUBMITTAL	02/15/17

Drawn: MT Check: BK Owner Approval:

Job No: 16024.00 Scale: AS NOTED

Title: ELEVATIONS CAR SERVICE

Sheet: A5.0

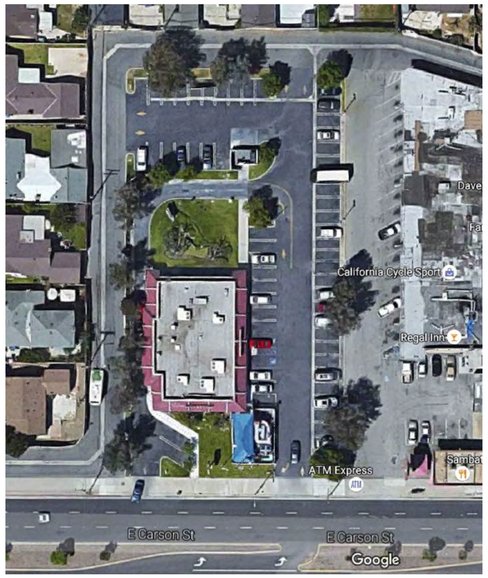

SRK
STEWART
ROMBERGER
KITE
SRK ARCHITECTS INC.

2254 S. Figueroa St.
Los Angeles, CA 90007
p: 213.747.1199

www.srkarchitectsinc.com

AUTOMATED CAR WASH AND AUTO REPAIR CENTER

6741 CARSON STREET
LAKEWOOD, CA.

© 2015 SRK ARCHITECTS, INC.
ALL DRAWINGS AND WRITTEN MATERIAL HEREIN CONSTITUTE THE ORIGINAL AND UNPUBLISHED WORK OF SRK ARCHITECTS, INC., AND THE SAME MAY NOT BE DUPLICATED, USED, OR DISCLOSED WITHOUT THE WRITTEN CONSENT OF SRK ARCHITECTS, INC.

Issue	Description	Date
–		XX/XX/17

Drawn: MT Check: BK Owner Approval:

Job No: 16024.00 Scale: AS NOTED

Title: SITE PHOTOS

Sheet: A6.0

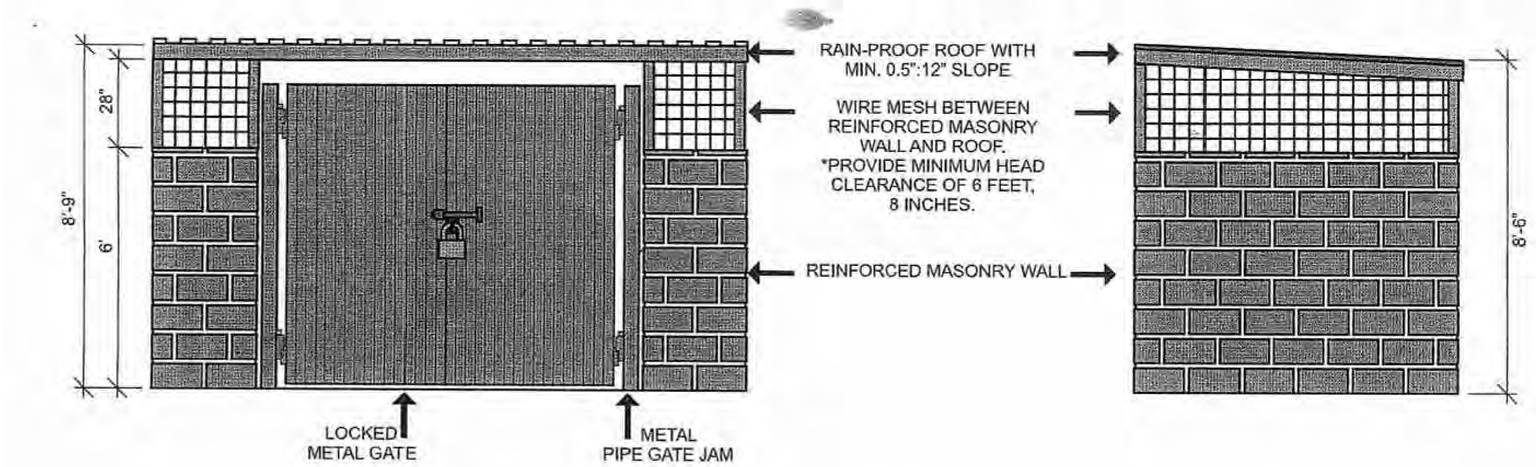

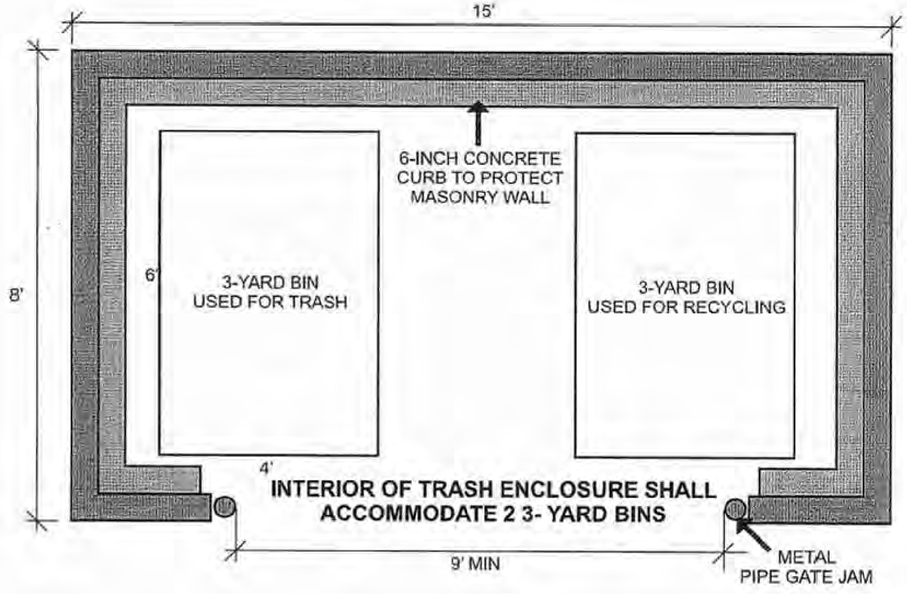

'ENGINEERED DRAWINGS AND
BUILDING PERMIT REQUIRED
FOR CONSTRUCTION

SRK
STEWART
ROMBERGER
KITE
SRK ARCHITECTS INC.

2254 S. Figueroa St.
Los Angeles, CA 90007
p: 213.747.1199

www.srkarchitectsinc.com

AUTOMATED CAR WASH AND AUTO REPAIR CENTER

6741 CARSON STREET
LAKEWOOD, CA.

© 2015 SRK ARCHITECTS, INC.
ALL DRAWINGS AND WRITTEN MATERIAL HEREIN CONSTITUTE THE ORIGINAL AND UNPUBLISHED WORK OF SRK ARCHITECTS, INC., AND THE SAME MAY NOT BE DUPLICATED, USED, OR DISCLOSED WITHOUT THE WRITTEN CONSENT OF SRK ARCHITECTS, INC.

Issue	Description	Date
–		XX/XX/17

Drawn: MT Check: BK Owner Approval:

Job No: 16024.00 Scale: AS NOTED

Title: TRASH ENCLOSURE

Sheet: A7.0

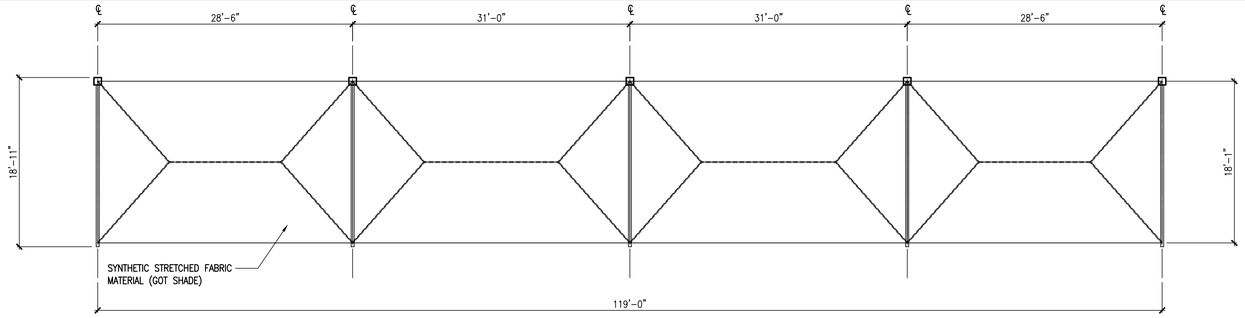

1 A8.0 EAST CANOPY - LAYOUT PLAN

SCALE: 1/8" = 1'-0"

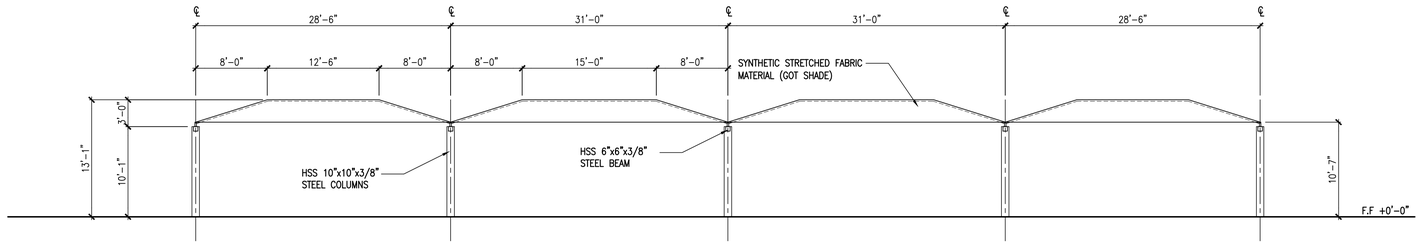

2 A8.0 EAST CANOPY - ELEVATION

SCALE: 1/8" = 1'-0"

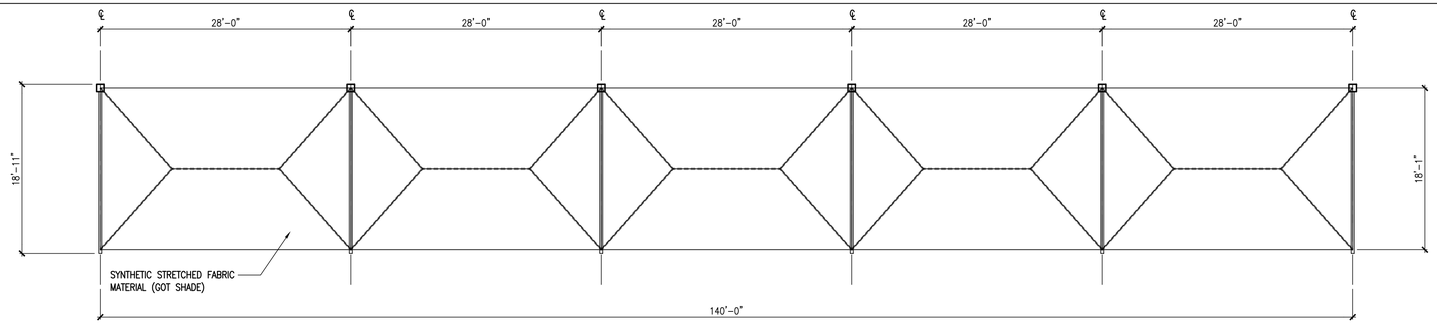

3 A8.0 WEST CANOPY - LAYOUT PLAN

SCALE: 1/8" = 1'-0"

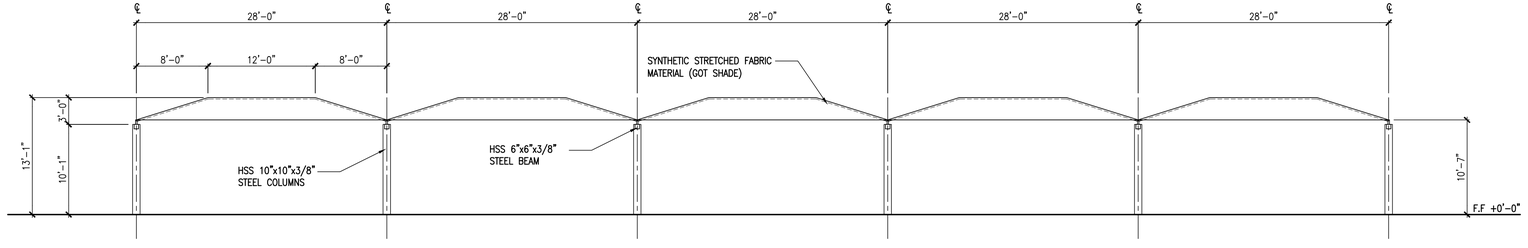

4 A8.0 WEST CANOPY - ELEVATION

SCALE: 1/8" = 1'-0"

A

B

C

D

SRK
STEWART
ROMBERGER
KITE
SRK ARCHITECTS INC.

2254 S. Figueroa St.
Los Angeles, CA 90007
p: 213.747.1199

www.srkarchitectsinc.com

AUTOMATED CAR WASH AND AUTO REPAIR CENTER

6741 CARSON STREET
LAKEWOOD, CA.

© 2017 SRK ARCHITECTS, INC.
ALL DRAWINGS AND WRITTEN MATERIAL HEREIN CONSTITUTE THE ORIGINAL AND UNPUBLISHED WORK OF SRK ARCHITECTS, INC., AND THE SAME MAY NOT BE DUPLICATED, USED, OR DISCLOSED WITHOUT THE WRITTEN CONSENT OF SRK ARCHITECTS, INC.

LICENSED ARCHITECT
BRIAN A. KITE
C-11258
RENEWAL DATE: 08/31/17
STATE OF CALIFORNIA

Issue	Description	Date
	CITY OF LAKEWOOD CUP SUBMITTAL	02/15/17

Drawn: MT Check: BK Owner Approval:

Job No: 16024.00 Scale: AS NOTED

Title: CANOPY PLAN AND ELEVATIONS

Sheet: A8.0

SRK
STEWART
ROMBERGER
KITE
SRK ARCHITECTS INC.

2254 S. Figueroa St.
Los Angeles, CA 90007
p: 213.747.1199

www.srkarchitectsinc.com

AUTOMATED CAR WASH AND AUTO REPAIR CENTER

6741 CARSON STREET
LAKEWOOD, CA.

© 2017 SRK ARCHITECTS, INC.
ALL DRAWINGS AND WRITTEN MATERIAL HEREIN CONSTITUTE THE ORIGINAL AND UNPUBLISHED WORK OF SRK ARCHITECTS, INC., AND THE SAME MAY NOT BE DUPLICATED, USED, OR DISCLOSED WITHOUT THE WRITTEN CONSENT OF SRK ARCHITECTS, INC.

LICENSED ARCHITECT
BRIAN A. KITE
C-11258
RENEWAL DATE: 08/31/17
STATE OF CALIFORNIA

Issue	Description	Date
	CITY OF LAKEWOOD CUP SUBMITTAL	02/15/17

Drawn: MT Check: BK Owner Approval:

Job No: 16024.00 Scale: AS NOTED

Title: MATERIAL FINISH

Sheet: A9.0

1 L1.0 PLANTING PLAN

SCALE: 1/16" = 1'-0"

NORTH

PLANT PALETTE:

TREES

- MELALEUCA QUINQUENERVIA — PAPERBARK TREE
- PYRUS CALERYIANA 'REDSPIRE' — REDSPIRE FLOWERING PEAR
- RHUS LANCEA — AFRICAN SUMAC
- EXISTING EUCALYPTUS TO REMAIN

MEDIUM SIZE SHRUBS, 3'-4' TALL

- ALOE ARBORESCENS — TORCH ALOE
- CALLISTEMON VIMINALIS 'LITTLE JOHN' — DWARF CALLISTEMON
- DIETES X 'NOLA ALBA' — KATRINA AFRICAN IRIS
- PHORMIUM TENAX 'AUTROPURPUREUM' — BRONZE NEW ZEALAND FLAX
- RUELLIA PENNISULARIS — DESERT RUELLIA
- WESTRINGIA FRUTICOSA 'GREY BOX' — DWARF COAST ROSEMARY

SMALL SHRUBS, 2'-3' TALL

- ALOE 'BLUE ELF' — ALOE 'BLUE ELF'
- ALOE RUDIKOPPE 'LITTLE GEM' — LITTLE GEM ALOE
- DIANELLA C. 'LITTLE BECCA' — LITTLE BECCA
- HESPERALOE PARVIFLORA — RED YUCCA
- MISCANTHUS T. 'SENTINEL' — SENTINEL
- RUSSELIA EQUISETIFORMIS — FIRECRACKER PLANT

GROUND COVERS, 1'-2' TALL

- ARCTOSTAPHYLOS 'GREEN CARPET' — GREEN CARPET MANZANITA
- DIANELLA TASMANICA 'VARIEGATA' — WHITE STRIPED TASMAN FLAX LILY
- LANTANA M. 'SPREADING SUNSET' — SPREADING SUNSET LANTANA
- SEDUM ADOLPHII 'FIRESTORM' — STONECROP
- TRADESCANTIA PILLADA 'PURPLE HEART' — PURPLE HEART

PLANTING NOTES:

1. EXISTING EUCALYPTUS TREE TO REMAIN, PENDING ON ARBORIST'S RECOMMENDATIONS
2. EXISTING PYGMY PALMS TO BE SAVED AND RELOCATED PER OWNER'S INSTRUCTIONS
3. EXISTING FLAG POLES TO REMAIN

GENERAL NOTES:

1. ALL PLANTING AREAS WILL BE IRRIGATED WITH A LOW FLOW IRRIGATION SYSTEM. A NEW SMART CONTROLLER, MASTER VALVE, FLOW SENOR, REMOTE CONTROL VALVES, PIPES AND OTHER EQUIPMENT WILL BE INSTALLED.
2. PRIOR TO PLANTING, PERFORM AGRONOMIC SOIL TESTING AND SOIL AMENDMENTS PER RECOMMENDATION BY SOIL LABORATORIES.
3. INSTALL 3 INCHES OF SHREDDED WOOD OR INERT MATERIAL AS MULCH IN ALL NEWLY PLANTED AREAS UPON COMPLETION OF PLANTING.

LANDSCAPE AREA:

TOTAL LANDSCAPE AREA = 8,455 SQUARE FEET

SRK
STEWART ROMBERGER KITE
SRK ARCHITECTS INC.
2254 S. Figueroa St.
Los Angeles, CA 90007
p: 213.747.1199
www.srkarchitectsinc.com

AUTOMATED CAR WASH AND AUTO REPAIR CENTER

6741 CARSON STREET
LAKEWOOD, CA.

© 2017 SRK ARCHITECTS, INC.
ALL DRAWINGS AND WRITTEN MATERIAL HEREIN CONSTITUTE THE ORIGINAL AND UNPUBLISHED WORK OF SRK ARCHITECTS, INC., AND THE SAME MAY NOT BE DUPLICATED, USED, OR DISCLOSED WITHOUT THE WRITTEN CONSENT OF SRK ARCHITECTS, INC.

LYNN CAPOUYA INC.
LANDSCAPE ARCHITECTS
17992 MITCHELL SOUTH ● SUITE 110 ● IRVINE, CA 92614 ● PHONE (949) 756-0150

Issue	Description	Date
	CITY OF LAKEWOOD CUP SUBMITTAL	02/15/17

Drawn: SN, CP, AI Check: JC Owner Approval:

Job No: 16024.00 Scale: AS NOTED

Title: PLANTING PLAN

Sheet: L1.0

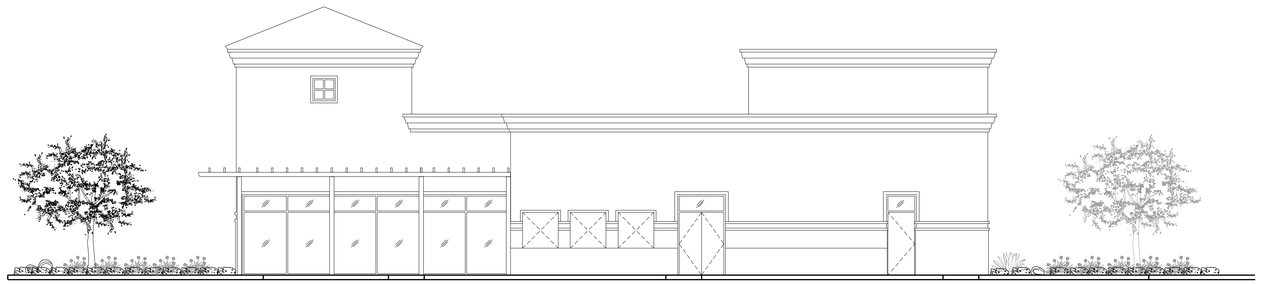

1 L2.0 EAST ELEVATION - CAR WASH

SCALE: 1/8" = 1'-0"

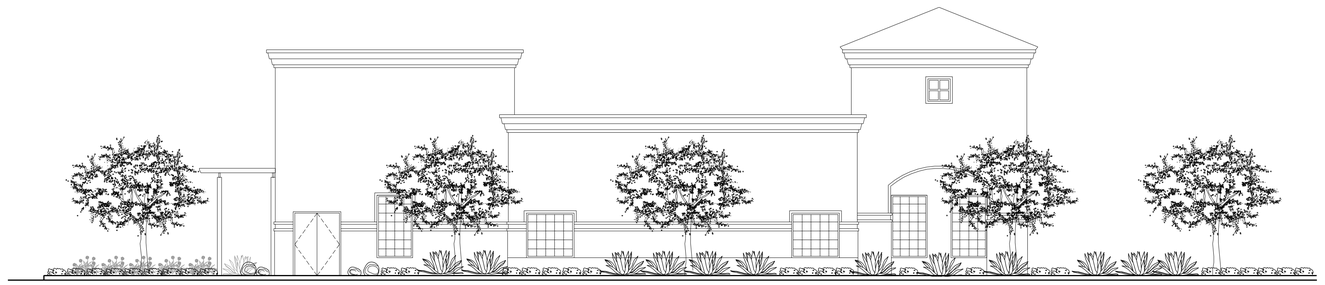

2 L2.0 WEST ELEVATION - CAR WASH

SCALE: 1/8" = 1'-0"

3 L2.0 NORTH ELEVATION - CAR WASH

SCALE: 1/8" = 1'-0"

4 L2.0 SOUTH ELEVATION - CAR WASH

SCALE: 1/8" = 1'-0"

SRK
STEWART
ROMBERGER
KITE
SRK ARCHITECTS INC.

2254 S. Figueroa St.
Los Angeles, CA 90007
p: 213.747.1199

www.srkarchitectsinc.com

AUTOMATED CAR WASH AND AUTO REPAIR CENTER

6741 CARSON STREET
LAKEWOOD, CA.

© 2017 SRK ARCHITECTS, INC.
ALL DRAWINGS AND WRITTEN MATERIAL HEREIN CONSTITUTE THE ORIGINAL AND UNPUBLISHED WORK OF SRK ARCHITECTS, INC., AND THE SAME MAY NOT BE DUPLICATED, USED, OR DISCLOSED WITHOUT THE WRITTEN CONSENT OF SRK ARCHITECTS, INC.

LCI LYNN CAPOUYA INC.
LANDSCAPE ARCHITECTS
17992 MITCHELL SOUTH ● SUITE 110 ● IRVINE, CA 92614 ● PHONE (949) 756-0150

Issue	Description	Date
	CITY OF LAKEWOOD CUP SUBMITTAL	02/15/17

Drawn: SN, CP, AI Check: JC Owner Approval:

Job No: 16024.00 Scale: AS NOTED

Title: PLANTING ELEVATIONS CAR WASH

Sheet: L2.0

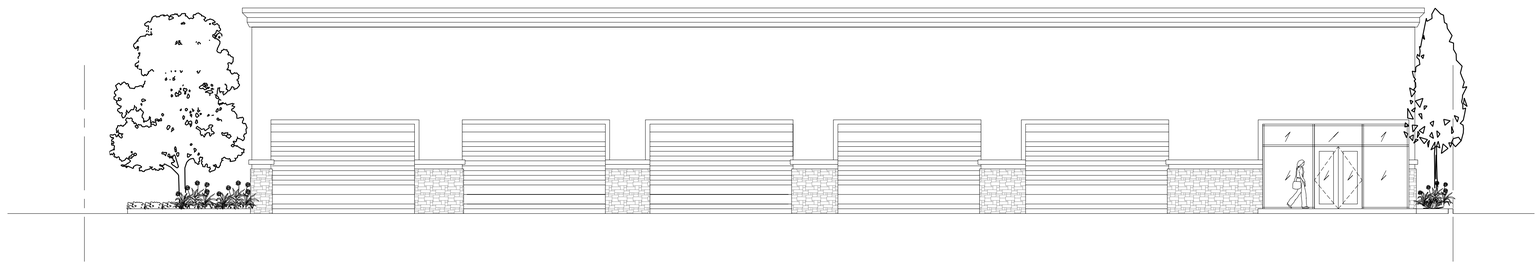

1 L3.0 SOUTH ELEVATION - CAR SERVICE

SCALE: 1/8" = 1'-0"

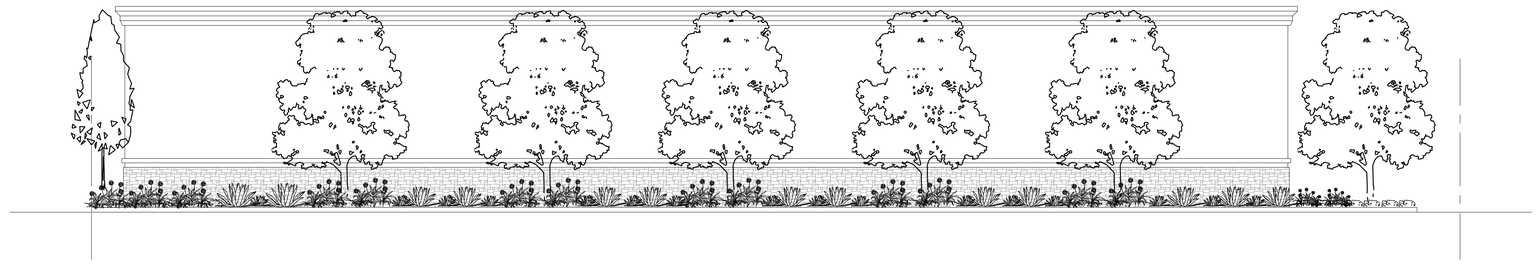

2 L3.0 NORTH ELEVATION - CAR SERVICE

SCALE: 1/8" = 1'-0"

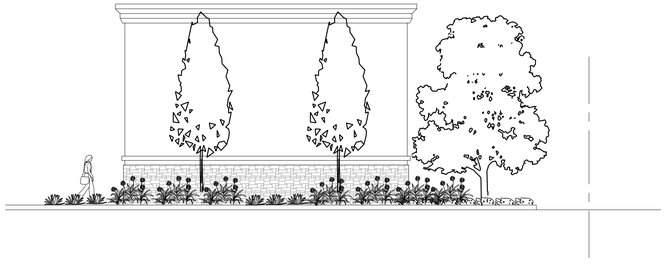

3 L3.0 EAST ELEVATION - SERVICE

SCALE: 1/8" = 1'-0"

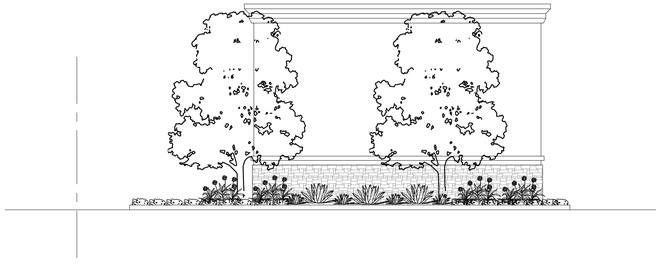

4 L3.0 WEST ELEVATION - CAR SERVICE

SCALE: 1/8" = 1'-0"

SRK
STEWART
ROMBERGER
KITE
SRK ARCHITECTS INC.

2254 S. Figueroa St.
Los Angeles, CA 90007
p: 213.747.1199

www.srkarchitectsinc.com

AUTOMATED CAR WASH AND AUTO REPAIR CENTER

6741 CARSON STREET
LAKEWOOD, CA.

© 2017 SRK ARCHITECTS, INC.
ALL DRAWINGS AND WRITTEN MATERIAL HEREIN CONSTITUTE THE ORIGINAL AND UNPUBLISHED WORK OF SRK ARCHITECTS, INC., AND THE SAME MAY NOT BE DUPLICATED, USED, OR DISCLOSED WITHOUT THE WRITTEN CONSENT OF SRK ARCHITECTS, INC.

LCI LYNN CAPOUYA INC.
LANDSCAPE ARCHITECTS
17992 MITCHELL SOUTH ● SUITE 110 ● IRVINE, CA 92614 ● PHONE (949) 756-0150

Issue	Description	Date
	CITY OF LAKEWOOD CUP SUBMITTAL	02/15/17

Drawn: SN, CP, AI Check: JC Owner Approval:

Job No: 16024.00 Scale: AS NOTED

Title: PLANTING ELEVATIONS CAR SERVICE

Sheet: L3.0

TREES

MELALEUCA QUINQUENERVIA

RHUS LANCEA

PYRUS CALERYIANA 'REDSPIRE'

MEDIUM SHRUBS

WESTRINGIA FRUTICOSA 'GREY BOX'

ALOE ARBORESCENS

RUSSELIA EQUISETIFORMIS

RUELLIA PENNISULARIS

DIETES X NOLA ALBA

MISCANTHUS T. 'SENTINEL'

PHORMIUM T. 'AUTROPURPUREUM'

SMALL SHRUBS

ALOE RUDIKOPPE 'LITTLE GEM'

DIANELLA C. 'LITTLE BECCA'

CALLISTEMON V. 'LITTLE JOHN'

ALOE ‘BLUE ELF’

HESPERALOE PARVIFLORA

GROUND COVERS

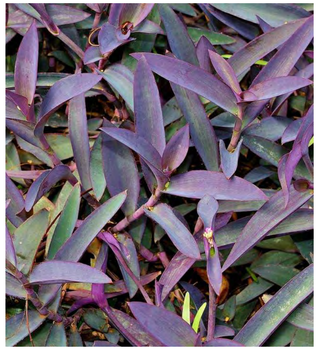

TRADESCANTIA P. ‘PURPLE HEART’

DIANELLA TASMANICA 'VARIEGATA'

SEDUM ADOLPHII 'FIRESTORM'

LANTANA M. 'NEW GOLD'

ARCTOSTAPHYLOS 'GREEN CARPET'

SRK
STEWART ROMBERGER KITE
SRK ARCHITECTS INC.

2254 S. Figueroa St.
Los Angeles, CA 90007
p: 213.747.1199

www.srkarchitectsinc.com

AUTOMATED CAR WASH AND AUTO REPAIR CENTER

6741 CARSON STREET
LAKEWOOD, CA.

© 2017 SRK ARCHITECTS, INC.
ALL DRAWINGS AND WRITTEN MATERIAL HEREIN CONSTITUTE THE ORIGINAL AND UNPUBLISHED WORK OF SRK ARCHITECTS, INC., AND THE SAME MAY NOT BE DUPLICATED, USED, OR DISCLOSED WITHOUT THE WRITTEN CONSENT OF SRK ARCHITECTS, INC.

LCI LYNN CAPOUYA INC.
LANDSCAPE ARCHITECTS
17992 MITCHELL SOUTH ● SUITE 110 ● IRVINE, CA 92614 ● PHONE (949) 756-0150

Issue	Description	Date
	CITY OF LAKEWOOD CUP SUBMITTAL	02/15/17

Drawn: SN, CP, AI Check: JC Owner Approval:

Job No: 16024.00 Scale: AS NOTED

Title: CONCEPTUAL PLANT IMAGES

Sheet: L4.0

SPRINKLER HEAD LEGEND

SPRAY PATTERN F	TH	H	Q	MANUFACTURE	BODY/NOZZLE	SPACING	PSI	FLOW GPM F	TH	H	Q
				RAINBIRD	RD-12-P30-F-NP, SQ	2'-4'	30	.4	–	.2	.12
				RAINBIRD	RD-12-P45-F-NP, R13-18	10'-14'	45	1.96	1.51	.98	.49
				RAINBIRD	RD-12-P45-F-NP, R17-24	15'-18'	45	3.67	2.73	1.84	.92
				RAINBIRD	PA-8S-PRS-SQ	2'-4'	30	.4	–	.2	.12
				RAINBIRD	PA-8S-PRS-R13-18	10'-18'	45	1.96	1.51	.98	.49
				RAINBIRD	PA-8S-PRS-R17-24	17'-24'	45	3.67	2.73	1.84	.92
BUBBLER											
				RAINBIRD	RWS-M-B-1401 MINI (TREE)	3'	30	.25	–	–	–
				RAINBIRD	1401 ON RISER (SHRUB)	3'	30	.25	–	–	–

NOTE: INSTALL CHECK VALVE FOR EACH BUBBLER HEAD – (TORO PCV-500 SERIES)

IRRIGATION NOTES:

1. THE IRRIGATION SYSTEM DESIGN IS BASED ON THE MINIMUM OPERATING PRESSURE AND THE MAXIMUM FLOW DEMAND SHOWN ON THE IRRIGATION DRAWINGS AT EACH POINT OF CONNECTION. THE IRRIGATION CONTRACTOR SHALL VERIFY WATER PRESSURE PRIOR TO CONSTRUCTION.
2. 120-VOLT ELECTRICAL SERVICE FOR CONTROLLER IS TO BE REFERENCED TO THE ELECTRICAL ENGINEER'S PLANS (SHEET __). THE IRRIGATION CONTRACTOR SHALL COORDINATE WITH GENERAL CONTRACTOR TO MAKE FINAL ELECTRICAL CONNECTIONS TO THE AUTOMATIC CONTROLLERS FROM THE PROVIDED OUTLET.
3. THIS DESIGN IS DIAGRAMMATIC. ALL PIPING, VALVES, ETC. SHOWN WITHIN PAVED AREAS IS FOR DESIGN CLARIFICATION ONLY AND SHALL BE INSTALLED IN PLANTING AREAS. AVOID ANY CONFLICTS WITH ABOVE GROUND UTILITY BOXES AND CABINETS, TREES, AND ARCHITECTURAL FEATURES.
4. THE IRRIGATION CONTRACTOR SHALL FLUSH AND ADJUST ALL DRIP EMITTERS, BUBBLER HEADS, & SPRAY HEADS FOR OPTIMUM PERFORMANCE AND TO PREVENT WATERING ONTO WALKS, ROADWAYS AND/OR BUILDINGS. THIS SHALL INCLUDE SELECTING THE BEST LOCATION TO FIT THE EXISTING SITE CONDITIONS AND TO THROTTLE THE FLOW CONTROL AT EACH VALVE TO OBTAIN THE OPTIMUM OPERATING PRESSURE FOR EACH SYSTEM.
5. DO NOT WILLFULLY INSTALL THE SPRINKLER SYSTEM AS SHOWN ON THE DRAWINGS WHEN IT IS OBVIOUS IN THE FIELD THAT OBSTRUCTIONS, GRADE DIFFERENCES OR DIFFERENCES IN THE AREA DIMENSIONS EXIST THAT MIGHT NOT HAVE BEEN CONSIDERED IN THE ENGINEERING. SUCH OBSTRUCTIONS OR DIFFERENCES SHOULD BE BROUGHT TO THE ATTENTION OF THE OWNER'S AUTHORIZED REPRESENTATIVE.
6. THE IRRIGATION CONTRACTOR SHALL ASSUME FULL RESPONSIBILITY FOR ANY REVISIONS NECESSARY. INSTALL PIPE MATERIALS AND EQUIPMENT AS SHOWN IN THE PLAN AND DETAILS. USE TEFLON TAPE ON ALL PVC MALE PIPE THREADS ON SPRINKLER SWING JOINT AND VALVE ASSEMBLIES.
7. IT IS THE RESPONSIBILITY OF THE IRRIGATION CONTRACTOR TO FAMILIARIZE HIMSELF WITH LOCATION OF WALLS, RETAINING WALLS, ETC. HE SHALL COORDINATE HIS WORK WITH THE GENERAL CONTRACTOR AND OTHER SUB-CONTRACTORS FOR THE LOCATION AND THE INSTALLATION OF PIPE SLEEVES THROUGH WALLS, UNDER ROADWAYS, PAVING STRUCTURES, ETC. IN ADDITION TO THE CONTROL WIRE SLEEVES SHOWN ON THE DRAWINGS.
8. THE IRRIGATION CONTRACTOR SHALL BE RESPONSIBLE FOR THE INSTALLATION OF CONTROL WIRE SLEEVES OF SUFFICIENT SIZE UNDER PAVED AREAS. WHEN CERTAIN OBSTRUCTIONS (FIRE HYDRANTS, TREES, LIGHTS, BOULDERS, ETC.) INTERFERE WITH THE SPRAY PATTERN OF THE IRRIGATION HEADS SO AS TO PREVENT PROPER COVERAGE, THE IRRIGATION CONTRACTOR SHALL FIELD ADJUST THE SPRINKLER SYSTEM ON EACH SIDE OF THE OBSTRUCTION TO PROVIDE PROPER COVERAGE. ALL ADJUSTMENTS SHALL BE PERFORMED AT NO ADDITIONAL COST TO THE OWNER.
9. ALL PARTS-FITTINGS SHALL TO BE GLUED WITH 721 BLUE GLUE.
10. EXISTING IRRIGATION FACILITIES THAT ARE TO REMAIN OR TO BE RELOCATED, AND THAT ARE WITHIN THOSE AREAS WHERE CLEARING AND GRUBBING OR EARTHWORK OPERATIONS ARE TO BE PERFORMED, SHALL BE CHECKED AND OPERATION FAMILIARIZED BY THE CONTRACTOR, AND INSPECTED FOR PROPER OPERATION PRIOR TO PERFORMING CLEARING AND GRUBBING OR EARTHWORK OPERATION. EXISTING IRRIGATION FACILITIES OUTSIDE OF WORK AREAS THAT ARE AFFECTED BY THE CONSTRUCTION WORK SHALL ALSO BE CHECKED FOR PROPER OPERATION INCLUDING EXISTING REMOTE CONTROL VALVES, IRRIGATION CONTROLLER, GATE VALVES, SHUT-OFF VALVES, AND ANY OTHER EQUIPMENT THAT SUPPLY WATER OR SERVICE TO THE SYSTEMS AFFECTED BY THE WORK SHOWN ON THE PLANS.
11. IRRIGATION LINE TRANSITION BETWEEN GROUND LEVEL TO BASEMENT LEVEL SEE DETAIL E, SHEET L-4.03

SLEEVE SIZING LEGEND	
USE SCH 40 PVC	
SLEEVE SIZE	INSERTED PIPE SIZE
2"	1/2" TO 1"
3"	1 1/4" TO 1 1/2"
4"	2"
6"	2 1/2" TO 3"
MAINLINE AND WIRE SLEEVE COMBO	
ONE-6" + TWO-4" PER SET	
ONE-8" + TWO-4" PER SET	

SLEEVE SIZE / NUMBER OF OR SETS OF SLEEVES

PIPE SIZING LEGEND		
SCH 40		
PIPE SIZE		GPM
B	3/4"	5 – 8
C	1"	9 – 13
D	1 1/4"	14 – 23
E	1 1/2"	24 – 30
F	2"	31 – 55
CLASS 315		
G	2 1/2"	56 – 70
H	3"	71 – 100
CLASS 200		
I	4"	101 – 200
J	6"	200 – 430
K	8"	430 – 730

VALVE SEQUENCE — FLOW (GPM) — PLANT TYPE — VALVE SIZE (e.g. L-10 25 1.5 TF)

PLAN TYPE LEGEND:
T – TURF
S – SHRUBS
TR – TREES
P – PALMS
V – VINE

IRRIGATION EQUIPMENT LEGEND

SYMBOL	MANUF.	MODEL NO.	SIZE	DESCRIPTION
M			–	WATER METER – PER CIVIL ENGINEER'S PLANS
	FEBCO FEBCO NIBCO VIT	825Y 650A T-113 SBBC-SS SERIES	–	BACKFLOW PREVENTER WITH WYE STRAINER– SHALL BE ENCLOSED IN STAINLESS STEEL STRONG BOX ENCLOSURE. CONTRACTOR SHALL ACQUIRE BACKFLOW CERTIFICATION FROM THE CITY PRIOR TO TURN OVER
	SUPERIOR CALSENSE	3200 SERIES CS-2W-POC DECODER	–	MASTER CONTROL VALVE WITH DECODER, NORMALLY CLOSED – SIZE PER PLAN.
F	CALSENSE	FM-B SERIES CS-2W-POC DECODER	–	FLOW METER WITH DECODER – INSTALL PER MANUFACTURER SPECIFICATION – SIZE PER PLAN
	NIBCO	T-113 SUPERIOR 3200 SERIES	–	GATE VALVE – DUCTILE IRON, RESILIENT WEDGE, SQUARE OPERATING NUT – MATCH MAINLINE SIZE
	RAINBIRD	1" 44-LRC	1"	QUICK COUPLER-LOCKING RUBBER COVER, 2-PIECE BODY
ASSEMBLY	SUPERIOR NIBCO CALSENSE	3200 SERIES T-FP-600A CS-2W-2ST DECODER	VARY VARY	REMOTE CONTROL VALVE ASSEMBLY w/ BRASS BALL VALVE AND BRASS UNION. BALL VALVE TO MATCH VALVE SIZE – SIZE PER PLAN
DRIP ASSEMBLY	SUPERIOR NIBCO NETAFIM NETAFIM CALSENSE	3200 SERIES T-FP-600A REGULATOR FILTER WITH 140 MESH BLACK DISC RINGS CS-2W-2ST DECODER	VARY VARY VARY VARY	LOW FLOW/DRIP REMOTE CONTROL VALVE ASSEMBLY w/ BRASS BALL VALVE, BRASS UNION, INLINE PRESSURE REGULATOR AND DRIP FILTER. BALL VALVE TO MATCH VALVE SIZE – SIZE PER PLAN PRESSURE REGULATOR 32PRV.75-43V2K, 43 PSI FOR SYSTEM FROM 1-17 GPM MAX 32PRV1.5-43V2K, 43 PSI FOR SYSTEM FROM 18-35 GPM MAX FILTER DF-100-140 FOR SYSTEM FROM 1-17 GPM MAX DF-150-140 FOR SYSTEM FROM 18-35 GPM MAX
	NETAFIM SPEARS	TLAVRV 1/2" SCH 40 BALL VALVE	1/2" 1/2"	MANUAL FLUSH AND AIR RELEASE VALVE IN A 12" ROUND VALVE BOX
	CALSENSE CS-3000 SERIES 2-WIRE WITH DECODER			CONTROLLER SHALL BE INSTALLED IN STAINLESS STEEL ENCLOSURE WITH ON/ OFF SWITCH. CONTRACTOR TO VERIFY 120V ELECTRICAL POWER SERVICE WITH RSCCD PRIOR START OF WORK. EXACT CONTROLLER LOCATION SHALL BE DETERMINED BY OWNER'S. CONTRACTOR SHALL OBTAIN CERTIFICATION FROM CALSENSE AND PROVIDE A COPY TO THE OWNER AND LANDSCAPE ARCHITECT PRIOR TO TURN OVER OF MAINTENANCE. CONTROLLER SHALL BE ASSEMBLED BY: CALSENSE CONTACT: MARK HUNTZINGER (760) 580-1827 CONTRACTOR SHALL PROGRAM EACH CONTROLLER TO RUN ON MAXIMUM FLOW CAPACITY SETTING. REFER TO CS-3000 CONTROLLER PROGRAMMING GUIDE. CALL ERIC HANSEN AT 1-800-572-8608 TO SET UP A NO CHARGE APPOINTMENT TO LEARN HOW TO PROGRAM THE CONTROLLER. WIRE CONNECTOR: 3M SCOTCH LOCK 3570 CONNECTORS. SPACE 100' MAX DISTANCE BETWEEN DECODER AND VALVE OR POC. TWO WIRE CABLE: IRRIGATION CONTROL, COMMON AND FLOW SENSOR WIRE SHALL BE PAIGE ELECTRIC SERIES # P7354D DIRECT BURIAL #12 GAUGE 2-WIRE. INSTALL 2-WIRE CABLE SYSTEM IN A 1 1/4" PVC ELECTRICAL CONDUIT AND JUNCTION AT EVERY REMOTE CONTROL VALVE BOX WITH ELECTRICAL PVC SWEEPS. MAXIMUM RUN 7,000 FEET. GROUNDING REQUIREMENTS: EVERY 300 FEET WITH ONE 5/8" X 8' COPPER GROUNDING ROD PER IRRIGATION CONTROLLER AND DECODER. USE #6 AWG SOLID COPPER WIRE FROM THE COPPER ROD TO THE FIELD COMMON (WHITE WIRES IN THE BLACK HARNESS) OF THE CONTROLLER / DECODER. ELECTRICAL SERVICE – REFER TO ELECTRICAL PLAN
DRIP ASSEMBLY	GPH IRRIGATION PRODUCTS MODEL # CP-4-36-50 1/2" IPS STICKY STRIPE FLEXIBLE PVC W/ 4GPH BUTTON EMITTERS PRE INSTALLED EVERY 36" O.C., 50' ROLLS 1/4" FLEXIBLE PVC DISTRIBUTION TUBING MODEL #GPVC250170 CUT TO 12" LONG			4 GPH EMITTER AT EVERY 36" O.C. WITH 12" LONG ¼" DISTRIBUTION TUBE ATTACHED TO THE EMITTER VERTICALLY. ROW SPACING TO BE 36" O.C. MAXIMUM. MANUFACTURE: GPH IRRIGATION PRODUCTS CONTACT: SHELLY WALKER @ (909) 648-3210 FOR PRODUCT AND ORDERING INFORMATION
	MAINLINE PIPE P.V.C. SCHEDULE 40 FOR PIPE 2" SIZE AND SMALLER, CLASS 315 FOR PIPE 2 1/2" AND LARGER BURY 18" BELOW FINISH GRADE – SIZE PER PLAN. CONTRACTOR SHALL MARK ALL NEW MAINLINES AND SLEEVES WITH 3" DETECTABLE UNDERGROUND WARNING TAPE OF THE APPROPRIATE COLOR AS IDENTIFIED IN THE APWA UNIFORM COLOR CODE. BY T-CHRISTY MODEL #TA-DT-3-BIRR			
	P.V.C. SCHEDULE 40 LATERAL LINE PIPE, BURY 12" BELOW FINISH GRADE – SIZE PER PLAN			
	MAINLINE AND LATERAL SLEEVING, CLASS 315 FOR 2" THROUGH 4", CLASS 200 FOR 6" AND ABOVE. SLEEVE PIPING SHALL BE MINIMUM 2X THE DIAMETER OF THE INSERTED MAINLINE OR LATERAL PIPING SIZE OTHERWISE NOTED ON PLAN. BURY 24" BELOW FINISH GRADE WIRE SLEEVE SHALL BE 4" CLASS 315 BURY 24" BELOW FINISH GRADE ALL MAINLINE SLEEVES SHALL BE ACCOMPANIED BY A WIRE SLEEVE			
	IRRIGATION NOTES: 1. THIS PLAN IS DIAGRAMMATIC. PIPING & VALVES SHOWN IN PAVED AREAS ARE TO BE INSTALLED IN LANDSCAPE AREAS WHEREVER POSSIBLE. 2. VERIFY POWER & WATER SOURCES WITH THE GENERAL CONTRACTOR. DO NOT INSTALL THE IRRIGATION SYSTEM AS SHOWN WHEN IT IS OBVIOUS THAT UNFORESEEN OBSTRUCTIONS, GRADE DIFFERENCES, OR DIFFERENCES IN AREA DIMENSIONS WOULD REQUIRE A CHANGE IN THE SYSTEM'S DESIGN. NOTIFY CAMPUS REPRESENTATIVE IMMEDIATELY UPON DISCOVERY OF ANY SUCH DISCREPANCIES. 3. COORDINATE PIPE & WIRE SLEEVE INSTALLATION WITH THE GENERAL CONTRACTOR. 4. LOCATE VALVE BOXES IN SHRUB AREAS WHENEVER POSSIBLE, OUT OF SIGHT OF PRIMARY VIEW.			

SRK
STEWART ROMBERGER KITE
SRK ARCHITECTS INC.
2254 S. Figueroa St.
Los Angeles, CA 90007
p: 213.747.1199
www.srkarchitectsinc.com

AUTOMATED CAR WASH AND AUTO REPAIR CENTER

6741 CARSON STREET
LAKEWOOD, CA.

© 2017 SRK ARCHITECTS, INC.
ALL DRAWINGS AND WRITTEN MATERIAL HEREIN CONSTITUTE THE ORIGINAL AND UNPUBLISHED WORK OF SRK ARCHITECTS, INC., AND THE SAME MAY NOT BE DUPLICATED, USED, OR DISCLOSED WITHOUT THE WRITTEN CONSENT OF SRK ARCHITECTS, INC.

LCI LYNN CAPOUYA INC. LANDSCAPE ARCHITECTS
17992 MITCHELL SOUTH ● SUITE 110 ● IRVINE, CA 92614 ● PHONE (949) 756-0150

Issue	Description	Date
	CITY OF LAKEWOOD CUP SUBMITTAL	02/15/17

Drawn: SN, CP, AI Check: JC Owner Approval:

Job No: 16024.00 Scale: AS NOTED

Title: IRRIGATION LEGEND

Sheet: L5.0

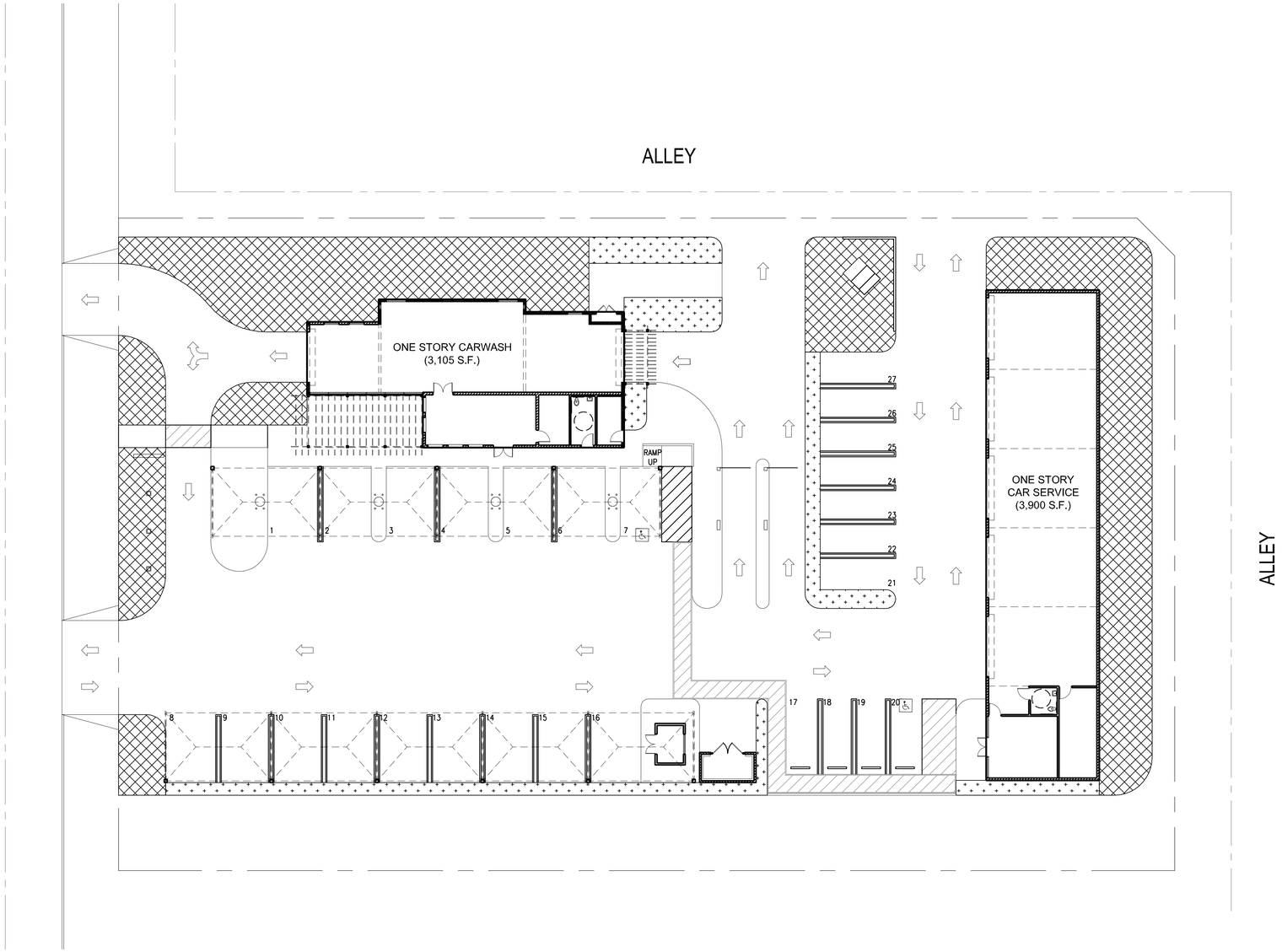

1 L6.0 IRRIGATION PLAN

SCALE: 1/16" = 1'-0"

NORTH

IRRIGATION METHOD:

HIGH EFFICIENT OVERHEAD ROTARY SPRAY SYSTEM

LOW FLOW / DRIP SYSTEM

SRK
STEWART ROMBERGER KITE
SRK ARCHITECTS INC.

2254 S. Figueroa St.
Los Angeles, CA 90007
p: 213.747.1199

www.srkarchitectsinc.com

AUTOMATED CAR WASH AND AUTO REPAIR CENTER

6741 CARSON STREET
LAKEWOOD, CA.

© 2017 SRK ARCHITECTS, INC.
ALL DRAWINGS AND WRITTEN MATERIAL HEREIN CONSTITUTE THE ORIGINAL AND UNPUBLISHED WORK OF SRK ARCHITECTS, INC., AND THE SAME MAY NOT BE DUPLICATED, USED, OR DISCLOSED WITHOUT THE WRITTEN CONSENT OF SRK ARCHITECTS, INC.

LCI LYNN CAPOUYA INC.
LANDSCAPE ARCHITECTS
17992 MITCHELL SOUTH ● SUITE 110 ● IRVINE, CA 92614 ● PHONE (949) 756-0150

Issue	Description	Date
	CITY OF LAKEWOOD CUP SUBMITTAL	02/15/17

Drawn: SN, CP, AI Check: JC Owner Approval:

Job No: 16024.00 Scale: AS NOTED

Title: IRRIGATION PLAN

Sheet: L6.0

APPENDIX “L”

Comments and Responses

COMMENTS AND RESPONSES

The Table below lists the persons, organizations, and public agencies that provided comments to the City of Lakewood on the Initial Study and proposed Mitigated Negative Declaration.

Comments on the Initial Study and proposed Mitigated Negative Declaration

Agency, Organization, and/or Person making Comment	Date of Communication
Los Angeles County Sheriff's Department	June 1, 2017
Gabrieleno Band of Mission Indians - Kizh Nation	March 21, 2017
State of California Department of Toxic Substances Control	June 29, 2017

The comment letters and emails received on the Initial Study and proposed Mitigated Negative Declaration are presented below along with the Lead Agency's responses to the environmental points that were raised. The comment letters and corresponding responses appear in the same order as they are listed in the Table above.

Letter from the Los Angeles County Sheriff's Department, James P. Wolak, Captain – Page 1

OFFICE OF THE SHERIFF

COUNTY OF LOS ANGELES

HALL OF JUSTICE

JIM MCDONNELL, SHERIFF

June 1, 2017

Carol Flynn Jacoby
City of Lakewood
5050 Clark Avenue
Lakewood, California 90712

Dear Mrs. Jacoby:

The purpose of this letter is to advise you regarding the review of the Conditional Use Permit 948 for a "Car Wash and Car Service Establishment."

REVIEW OF CONDITIONAL USE PERMIT (CUP) 948 - Review of the application for Conditional Use Permit at "6741 Carson Street, "Car Wash and Car Service Establishment."

We have conducted a review of calls for service for a two year time period for the business complex located at 6741 Carson Street. We did not find any incidents that directly reflect negatively on the proposed business. There were no complaints to this property. There are no records of any complaints of parking issues directly related to the business/property. However, based on past histories with these types of businesses, we have some concerns regarding these types of establishments.

- Parking should be configured for and maintained with sufficient lighting to illuminate to appearance and conduct of all persons in parking areas.
- Emphasize the importance of effective communication between the managers of the establishment regarding professional business practices.

211 WEST TEMPLE STREET, LOS ANGELES, CALIFORNIA 90012

A Tradition of Service
Since 1850

- Management should have an ongoing liaison relationship with members of the Sheriff's Department, so that communication can be easily facilitated if problems occur.
- The establishment should be required to have a working "State of the art" video surveillance system in place to allow Sheriff's personnel to assist in criminal investigations. The storage medium should be secured in such a manner as to not to facilitate the easy removal from unauthorized personnel or employees under duress.
- The establishment should be required to have a "State of the art" silent robbery alarm system in place to allow employees to promptly report crimes in progress, if they are safely able to do so.
- No alcohol allowed, including refusal of services to any intoxicated person, or person who is under the influence of a controlled substance.
- This CUP shall be subject to a six month review after the initial opening of the carwash facility allowing input from the Sheriff's Department for any concerns that may arise.

If this request is approved, we recommend the proposed business of Car Wash and Car Service management should have an ongoing liaison relationship with the Sheriff's Department and the city of Lakewood, to ensure a strong level of communication for crime prevention and problem solving efforts.

If there are any further questions, you may contact Lieutenant Richard Harpham at (562) 623-3603.

Sincerely,

JIM McDONNELL, SHERIFF

James P. Wolak, Captain
Commander, Lakewood Station

Responses to Letter from the Los Angeles County Sheriff's Department, James P. Wolak

The above conditions were incorporated into the proposed Resolution of Approval that will be considered by the Planning and Environment Commission:

1. Parking should be configured for and maintained with sufficient lighting to illuminate the appearance and conduct of all persons in parking areas.
2. Emphasize the importance of effective communication between the managers of the establishment regarding professional business practices.
3. Management should have an ongoing liaison relationship with members of the Sheriff's Department, so that communication can be easily facilitated if problems occur.
4. The establishment should be required to have a working "State of the art" video surveillance system in place to allow Sheriff's personnel to assist in criminal investigations. The storage medium should be secured in such a manner as to not to facilitate the easy removal from unauthorized personnel or employees under duress.
5. The establishment should be required to have a "State of the art" silent robbery alarm system in place to allow employees to promptly report crimes in progress, if they are safely able to do so.
6. No alcohol allowed, including refusal of services to any intoxicated person, or person who is under the influence of a controlled substance.
7. This CUP shall be subject to a six month review after the initial opening of the carwash facility allowing input from the Sheriff's Department for any concerns that may arise.
8. The proposed business of Car Wash and Car Service management should have an ongoing liaison relationship with the Sheriff's Department and the city of Lakewood, to ensure a strong level of communication for crime prevention and problem solving efforts.

First letter from the Gabrieleno Band of Mission Indians – Kizh Nation – Page 1

GABRIELEÑO BAND OF MISSION INDIANS - KIZH NATION
Historically known as The San Gabriel Band of Mission Indians
recognized by the State of California as the aboriginal tribe of the Los Angeles basin

City of Lakewood
5050 Clark Ave
Lakewood, CA 90712

May 30, 2017

Re: AB52 Consultation request for 6741 Carson St. Lakewood, CA Carwash and Car Service

Dear Paul Kuykendall,

Please find this letter as a written request for consultation regarding the above-mentioned project pursuant to Public Resources Code § 21080.3.1, subd. (d). Your project lies within our ancestral tribal territory, meaning descending from, or a higher degree of kinship than traditional or cultural affiliation. Your project is located within a sensitive area and may cause a substantial adverse change in the significance of our tribal cultural resources. Most often, a records search for our tribal cultural resources will result in a "no records found" for the project area. The Native American Heritage Commission, ethnographers, historians, and professional archaeologists can only provide limited information that has been previously documented about California Native Tribes. This is the reason the Native American Heritage Commission (NAHC) will always refer the lead agency to the respective Native American Tribe of the area because the NAHC is only aware of general information and are not the experts on each California Tribe. Our Elder Committee & tribal historians are the experts for our Tribe and are able to provide a more complete history (both written and oral) regarding the location of historic villages, trade routes, cemeteries and sacred/religious sites in the project area. Therefore, to avoid adverse effects to our tribal cultural resources, we would like to consult with you and your staff to provide you with a more complete understanding of the prehistoric use(s) of the project area and the potential risks for causing a substantial adverse change to the significance of our tribal cultural resources.

Consultation appointments are available on Wednesdays and Thursdays at our offices at 901 N. Citrus Ave. Covina, CA 91722 or over the phone. Please call toll free 1-844-390-0787 or email gabrielenoindians@yahoo.com to schedule an appointment.

** Prior to the first consultation with our Tribe, we require all those individuals participating in the consultation to view a video produced and provided by CalEPA and the NAHC for sensitivity and understanding of AB52. You can view the video at: http://nahc.ca.gov/2015/12/ab-52-tribal-training/

With Respect,

Andrew Salas, Chairman

Andrew Salas, Chairman | Nadine Salas, Vice-Chairman | Christina Swindall Martinez, secretary
Albert Perez, treasurer I | Martha Gonzalez Lemos, treasurer II | Richard Gradias, Chairman of the Council of Elders
PO Box 393, Covina, CA 91723 | www.gabrielenoindians.org | gabrielenoindians@yahoo.com

Second letter from the Gabrieleno Band of Mission Indians – Kizh Nation – Page 1

Kizh Gabrieleno Band of Mission Indians

Re: Cultural Resources Mitigation Measures, regarding Tribal Cultural Resources and Human Remains and associated funerary objects within Kizh Gabrieleño Tribal Territory.

Note: *The Gabrieleño Band of Mission Indians Kizh -Nation ONLY replies to projects within their ANCESTRAL territory, because it's the highest degree of relationship to the land, even over culturally or traditionally affiliated, and our Oral History and documented information pertain to our Tribe's village areas, commerce areas, recreation areas, and burial locations within our tribe's ancestral territory. Therefore, in order to protect these irreplaceable Tribal Cultural Resources within our ancestral tribal territory, Native American Monitors shall be from the Gabrieleño Band of Mission Indians Kizh -Nation.*

Retain a Native American Monitor: The project Applicant will be required to obtain the services of a qualified Native American Monitor(s) during construction-related ground disturbance activities. Ground disturbance is defined by the Tribal Representatives from the Gabrieleño Band of Mission Indians-Kizh Nation as activities that include, but are not limited to, pavement removal, pot-holing or auguring, grubbing, weed abatement, boring, grading, excavation, and trenching, within the project area. The monitor(s) must be approved by the Tribal Representatives and will be present on-site during the construction phases that involve any ground disturbing activities. The Native American Monitor(s) will complete monitoring logs on a daily basis. The logs will provide descriptions of the daily activities, including construction activities, locations, soil, and any cultural materials identified. The monitor(s) shall possess Hazardous Waste Operations and Emergency Response (HAZWOPER) certification. In addition, the monitor(s) will be required to provide insurance certificates, including liability insurance, for any archaeological resource(s) encountered during grading and excavation activities pertinent to the provisions outlined in the California Environmental Quality Act, California Public Resources Code Division 13, Section 21083.2 (a) through (k). The on-site monitoring shall end when the project site grading and excavation activities are completed, or when the Tribal Representatives and monitor have indicated that the site has a low potential for archeological resources.

***Hazwoper is needed only if the site has hazardous concerns.*

Unanticipated Discovery of Tribal Cultural Resources: All archaeological resources unearthed by project construction activities shall be evaluated by the Qualified Archaeologist and Native Monitor. If the resources are Native American in origin, the Tribe shall coordinate with the landowner regarding treatment and curation of these resources. Typically, the Tribe will request reburial or preservation for educational purposes. If a resource is determined by the Qualified Archaeologist to constitute a "historical resource" pursuant to CEQA Guidelines Section 15064.5(a) or has a "unique archaeological resource" pursuant to Public Resources Code Section 21083.2(g), the Qualified Archaeologist shall coordinate with the applicant and the City to develop a formal treatment plan that would serve to reduce impacts to the resources. The treatment plan established for the resources shall be in accordance with CEQA Guidelines Section 15064.5(f) for historical resources and Public Resources Code Sections 21083.2(b) for unique archaeological resources. Preservation in place (i.e., avoidance) is the preferred manner of treatment. If preservation in place is not feasible, treatment may include implementation of archaeological data recovery excavations to remove the resource along with

subsequent laboratory processing and analysis. Any historic archaeological material that is not Native American in origin shall be curated at a public, non-profit institution with a research interest in the materials, such as the Natural History Museum of Los Angeles County or the Fowler Museum, if such an institution agrees to accept the material. If no institution accepts the archaeological material, they shall be donated to a local school or historical society in the area for educational purposes.

Unanticipated Discovery of Human remains and associated funerary objects: Human remains are defined as any physical remains of a human being. The term "human remains" encompasses more than human bones. In ancient as well as historic times, Tribal Traditions included, but were not limited to, the burial of associated cultural resources (Funerary objects) with the deceased, and the ceremonial burning of human remains. These remains are to be treated in the same manner as bone fragments that remain intact. Associated funerary objects are objects that, as part of the death rite or ceremony of a culture, are reasonably believed to have been placed with individual human remains either at the time of death or later; other items made exclusively for burial purposes or to contain human remains can also be considered as associated funerary objects. NAGPRA guidance specifically states that the federal agencies will consult with organizations on whose aboriginal lands the remains and cultural items might be discovered, who are reasonably known to have a cultural relationship to the human remains and other cultural items. Therefore, for this project site, it is appropriate to consult with the Gabrieleno Band of Mission Indians – Kizh Nation as recommended by the NAHC.

Prior to the start of ground disturbing activities, the land owner shall arrange a designated site location within the footprint of the project for the respectful reburial of the human remains and/or ceremonial objects. Any discoveries of human skeletal material shall be immediately reported to the County Coroner. The monitor will immediately divert work at minimum of 50 feet and place an exclusion zone around the burial. The monitor will then notify the Qualified Archaeologist and the construction manager who will call the coroner. Work will continue to be diverted while the coroner determines whether the remains are Native American. The discovery is to be kept confidential and secure to prevent any further disturbance. If Native American, the coroner will notify the NAHC as mandated by state law who will then appoint a Most Likely Descendent. In the case where discovered human remains cannot be fully documented and recovered on the same day, the remains will be covered with muslin cloth and a steel plate that can be moved by heavy equipment placed over the excavation opening to protect the remains. If this type of steel plate is not available, a 24 hour guard should be posted outside of working hours. The Tribe will make every effort to recommend diverting the project and keeping the remains in situ and protected. If the project cannot be diverted, it may be determined that burials will be removed. The Tribe will work closely with the Qualified Archaeologist to ensure that the excavation is treated carefully, ethically and respectfully. If data recovery is approved by the Tribe, documentation shall be taken which includes at a minimum detailed descriptive notes and sketches. Additional types of documentation shall be approved by the Tribe for data recovery purposes. Cremations will either be removed in bulk or by means as necessary to ensure completely recovery of all material. If the discovery of human remains includes 4 or more burials, the location is considered a cemetery and a separate treatment plan shall be created. The project applicant shall consult with the Tribe regarding avoidance of all cemetery sites. Once complete, a final report of all activities are to be submitted to the NAHC. The Tribe does NOT authorize any scientific study or the utilization of any invasive diagnostics on human remains.

If the coroner determines the remains represent a historic non-Native American burial, the burial shall be treated in the same manner of respect with agreement of the coroner. Reburial will be in an appropriate setting. If the coroner determines the remains to be modern, the coroner will take custody of the remains.

Each occurrence of human remains and associated funerary objects will be stored using opaque cloth bags. All human remains, funerary objects, sacred objects and objects of cultural patrimony will be removed to a secure container on site if possible. These items should be retained and reburied within six months of recovery. The site of reburial/repatriation shall be on the project site but at a location mitigated between the Tribe and the landowner at a site to be protected in perpetuity. There shall be no publicity regarding any cultural materials recovered.

Professional Standards: Archaeological and Native American monitoring and excavation during construction projects will be consistent with current professional standards. All feasible care to avoid any unnecessary disturbance, physical modification, or separation of human remains and associated funerary objects shall be taken. Principal personnel must meet the Secretary of Interior standards for archaeology and have a minimum of 10 years of experience as a principal investigator working with Tribal Cultural Resources in southern California. The Qualified Archaeologist shall ensure that all other personnel are appropriately trained and qualified.

Responses to letters from the Gabrieleno Band of Mission Indians – Kizh Nation – Page 1

The Gabrieleno Band of Mission Indians - Kizh Nation (Kizh Nation) requested consolation for this project pursuant to AB-52. Prior to consultation, proposed mitigation measures were sent to the Kizh Nation. The consultation took place on June 21, 2017 and the Kizh Nation proposed a full-time Native American (NA) monitor during project implementation. The City reviewed the request for a full-time Native American (NA) monitor during project implementation and after further consideration, it was found that a full-time NA monitor is not warranted based on the following conclusions:

- A certified archaeologist will be available on site during ground disturbing activities and are trained to identify NA cultural resources.

- The project area is not located within an area that is known to be sensitive for tribal cultural resources according to local archives and the Native American Heritage Commission.

- The proposed mitigations for this project are the same mitigations to be implemented for recent projects in the city which required significantly greater expanse and depth of excavation (up to 20 feet below grade) in comparison to the currently proposed intersection improvements whose ground disturbing activities are mostly limited to more shallow excavations. Additionally, the similarly proposed mitigations to provide full-time archaeological monitoring during earthmoving activities on-site were considered to be satisfactory based on consultation w/other local tribes as a result of the City's effort to protect NA cultural resources during project implementation.

Nonetheless, the City is committed to fulfill its responsibility in respect to protecting NA cultural resources but unless there is further demonstrable evidence that potentially sensitive NA cultural resource underlie the project area, the City believes that the proposed archaeological monitoring program for the project (to be performed by a licensed archaeologist on-site during any earthmoving activities) will be adequate. As such, the original, proposed mitigation measure have been incorporated into the Initial Study/Mitigated Negative Declaration and implemented as part of the project's Mitigation Monitoring and Reporting Program.

Letter from the State of California - Department of Toxic Substances Control – Page 1

Department of Toxic Substances Control

Barbara A. Lee, Director
5796 Corporate Avenue
Cypress, California 90630

Matthew Rodriquez
Secretary for
Environmental Protection

Edmund G. Brown Jr.
Governor

June 29, 2017

Mr. Paul Kuykendall, AICP
Senior Planner
City of Lakewood
5050 North Clark Avenue
Lakewood, California 90712

INITIAL STUDY AND PROPOSED MITIGATED NEGATIVE DECLARATION (ND) FOR CONDITIONAL USE PERMIT No. 948 (PARKCREST CAR WASH AND CAR SERVICE) PROJECT

Dear Mr. Kuykendall:

The Department of Toxic Substances Control (DTSC) has reviewed the subject ND. The following project description is stated in the ND: "The project site is rectangular in shape and is approximately 1.11 acres in area and will have a net area of 1.06 acres." "The site is developed with a former 4,888 square-foot, single-story, McDonald's drive-thru restaurant. There is also a freestanding sign (but lacking a sign face), a trash enclosure, a paved parking lot, and ornamental landscaping. The proposed project calls for conversion of the existing restaurant building into a selfservice style of carwash and for the construction of a new car service building."

Based on the review of the submitted document DTSC has the following comments:

1. The ND should identify and determine whether current or historic uses at the project site may have resulted in any release of hazardous wastes/substances. A Phase I Environmental Site Assessment may be necessary to identify any recognized environmental conditions.

2. If there are any recognized environmental conditions in the project area, then proper investigation, sampling and remedial actions overseen by the appropriate regulatory agencies should be conducted prior to the new development or any construction.

3. If the project plans include discharging wastewater to a storm drain, you may be required to obtain an NPDES permit from the overseeing Regional Water Quality Control Board (RWQCB).

Printed on Recycled Paper

4. The ND states, "Most of the former 4,888 square-foot McDonald's drive-thru restaurant will be demolished, but the west wall of the former restaurant will be incorporated in to the new carwash building." If planned activities include structures/building modifications/demolitions, lead-based paints or products, mercury, and asbestos containing materials (ACMs) should be addressed in accordance with all applicable and relevant laws and regulations.

5. If the site was used for agricultural or related activities, residual pesticides may be present in onsite soil. DTSC recommends investigation and mitigation, as necessary, to address potential impact to human health and environment from residual pesticides.

6. DTSC recommends evaluation, proper investigation and mitigation, if necessary, on onsite areas with current or historic PCB-containing transformers.

7. If soil contamination is suspected or observed in the project area, then excavated soil should be sampled prior to export/disposal. If the soil is contaminated, it should be disposed of properly in accordance with all applicable and relevant laws and regulations. If the project proposes to import soil to backfill the excavated areas, proper evaluation and/or sampling should be conducted to make sure that the imported soil is free of contamination.

8. If during construction/demolition of the project, soil and/or groundwater contamination is suspected, construction/demolition in the area should cease and appropriate health and safety procedures should be implemented. If it is determined that contaminated soil and/or groundwater exist, the ND should identify how any required investigation and/or remediation will be conducted, and the appropriate government agency to provide regulatory oversight.

If you have any questions regarding this letter, please contact me at (714) 484-5380 or email at Johnson.Abraham@dtsc.ca.gov.

Sincerely,

Johnson P. Abraham
Project Manager
Brownfields Restoration and School Evaluation Branch
Brownfields and Environmental Restoration Program - Cypress

kl/sh/ja

cc: See next page

cc: Governor's Office of Planning and Research (via e-mail)
State Clearinghouse
P.O. Box 3044
Sacramento, California 95812-3044
State.clearinghouse@opr.ca.gov

Mr. Dave Kereazis (via e-mail)
Office of Planning & Environmental Analysis
Department of Toxic Substances Control
Dave.Kereazis@dtsc.ca.gov

Mr. Shahir Haddad, Chief (via e-mail)
Schools Evaluation and Brownfields Cleanup
Brownfields and Environmental Restoration Program - Cypress
Shahir.Haddad@dtsc.ca.gov

Response to letters from the State of California - Department of Toxic Substances Control
Page 1

1. Appendix F contains the Asbestos and Lead Paint Survey and Hazardous Building Materials Inventory Memo and Report for this project. According to City of Lakewood building permit records, the site appears to have first been developed with a temporary sales office for a residential development in 1952. In 1957 permits were issued for a warehouse addition to an existing market owned by Schumard Brothers. Subsequent permits show that it was Sunfair Market, Inc., Jenkins Market, Arthur's Market, and then Eddie's Liquor #29. The market building was demolished in 1989 and a McDonald's drive-thru restaurant was completed in October 1989. The McDonald's drive-thru restaurant closed in 2016.

2. Appendix F contains the Asbestos and Lead Paint Survey and Hazardous Building Materials Inventory Memo and Report for this project.

3. See Section IX. Hydrology And Water Quality for the discussion on wastewater.

4. Appendix F contains the Asbestos and Lead Paint Survey and Hazardous Building Materials Inventory Memo and Report for this project.

5. See Appendix A (South Central Coastal Information Center Record Search Results). The report does not indicate extensive agricultural or agricultural related that would otherwise generate substantial levels of pesticides. Appendix F contains the Asbestos and Lead Paint Survey and Hazardous Building Materials Inventory Memo and Report for this project. It does not contain require mitigation for pesticide residues.

6. Appendix F contains the Asbestos and Lead Paint Survey and Hazardous Building Materials Inventory Memo and Report for this project. According to City of Lakewood building permit records, the site appears to have first been developed with a temporary sales office for a residential development in 1952. In 1957 permits were issued for a warehouse addition to an existing market owned by Schumard Brothers. Subsequent permits show that it was Sunfair Market, Inc., Jenkins Market, Arthur's Market, and then Eddie's Liquor #29. The market building was demolished in 1989 and a McDonald's drive-thru restaurant was completed in October 1989. The McDonald's drive-thru restaurant closed in 2016.

7. Comment received.

8. Comment received.